OWNERS MANUAL

INSTALLATION & MAINTENANCE INSTRUCTIONS



INSTALLED BY:

DATE:

MIDLAND™
GARAGE DOOR MFG CO

RESIDENTIAL GARAGE DOORS

11-12-26

TABLE OF CONTENTS

SAFETY INFORMATION ..... Page 3
Prior to starting ..... Page 4
Tools required ..... Page 4
Hardware components ..... Page 5
Step by step installation instructions ..... Page 7

SPECIAL APPLICATION INSTRUCTIONS:
- GRIP POINT COMPLIANCE ..... Page 10
- Low Headroom-torsion-springs front ..... Page 30

Maintenance ..... Page 32
Warranty ..... Page 34

IMPORTANT SAFETY INFORMATION

Springs, cables, and bottom fixtures are under extreme spring tension. **NEVER ATTEMPT TO REMOVE FASTENERS ON THESE COMPONENTS UNLESS THE SPRINGS ARE COMPLETELY UNWOUND.**

NOTE - All fasteners that are colored in **RED** are under extreme tension and must never be removed unless the springs are unwound and all spring tension is released.

CAUTION - Due to the extreme spring tension, never wind or unwind without the proper winding bars. Cold rolled steel bars ½" in diameter 18" to 22" in length are recommended.

The door has been furnished with **GRIPPING POINTS** to allow safe manual operation. See the "Grip Point Compliance" inset on page 10 for a description and installation instructions.

Never install door components directly on sheetrock.

Do not permit children to play underneath the garage door or with any garage door operating controls.

Always have the door in view to ensure its travel is free and clear before operating the electric garage door opener.

PRIOR TO START: PLEASE READ THIS

- Take heed of the **NOTES** and **CAUTIONS** in this book.
- Study the installation instructions to understand what the various components are and the sequence of assembly. The illustrations on pages 6 and 13 show typical door installations.
- Note that the **RED FASTENERS** are used on all components that are under spring tension. This serves as a warning that serious harm could occur if the fastener is removed while under spring tension. **NOTE:** The Safety Bolt Bag in the hardware box contains **RED LAGS**, **RED SELF TAPPERS**, and **RED FLANGE NUTS**.
- Verify type of door and track to refer to the proper illustrations and sections of this manual. (Found on the front cover of this booklet)
- It is recommended to pre-drill ¼" holes for **ALL** 5⁄16 x 1⅝ wood lags...**ESPECIALLY THE CENTER BEARING PLATE** that attaches the spring(s) to the wall. This prevents the wood from splitting out and gives the most secure attachment.
- Remove the **PROTECTIVE FILM** from the sections upon installation. If the film is allowed to get wet or if the sections get too hot by exposing them to direct sunlight, the adhesive may transfer from the film to the section.

TOOLS REQUIRED

- HAMMER
- ELECTRIC IMPACT OR SCREW GUN
- SCREW DRIVERS
- SAW HORSES
- SOCKET SET
- ROPE
- ⅜" TO 9⁄16" WRENCH SET
- QUALITY STEP LADDER
- VISE GRIPS
- TWO ½" WINDING BARS 18" TO 22"
- TAPE MEASURE
- LEVEL
- PLIERS
- DRILL
- DRILL BITS: ¼", 5⁄16", ⅜", 7⁄16"
- EXTENSION CORD
- HACK SAW

NOTE: A 7⁄16" DEEP WELL 12 POINT SOCKET ON A ⅜" DRIVE RATCHET RECOMMENDED. IT CAN BE USED FOR CABLE DRUM AND SPRING SET SCREWS AND ANY 7⁄16" FASTENER.

MIDLAND GARAGE DOOR MFG CO
RESIDENTIAL GARAGE DOOR **OWNERS MANUAL**

HARDWARE COMPONENTS

3⁄8 x 7⁄8 Carriage Bolt 	3/8 x 11/2 Bolt 	Top Fixture Double Slotted 
5/16 x 1 5/8 Wood Lag 	3/8 Flange Nut 	Bottom Fixture (1 pair) 
1/4 x 3/4 Self Tapper 	Jamb Bracket 	Horizontal Angle 
1/4 x 5/8 Track Bolt 	Torsion Spring 	Flag Bracket (1 pair) 
1/4 Carriage Bolt 	End Bearing Plate (1 pair) 	Curved Horizontal Track (1 pair) 
1/4 x 5/8 Carriage Bolt 	Spring Shaft 	Vertical Track (1 pair) 
1/4 Flange Nut 	Center Bearing Plate 	Cable Assembly 
5/16 x 1 5/8 Red Head Wood Lag 	Cable Drums (1 pair) 	Lock Components 
1/4 x 3/4 Red Head Self Tapper 	Nylon Center Bearing 	Roller 
3/8 Flange Red Nut 	Strut 	Inside Lock 
Rope 	Step Plate 	Lift Handle  Hinge #1 
Low Profile Hinges 	Vinyl Weatherstrip 	Hinges #2  #3
Roller Bracket 	Reverse Angle Track 	

DOUBLE TORSION SPRING
4-SECTION HIGH DOOR
8’ HIGH DOOR SHOWN

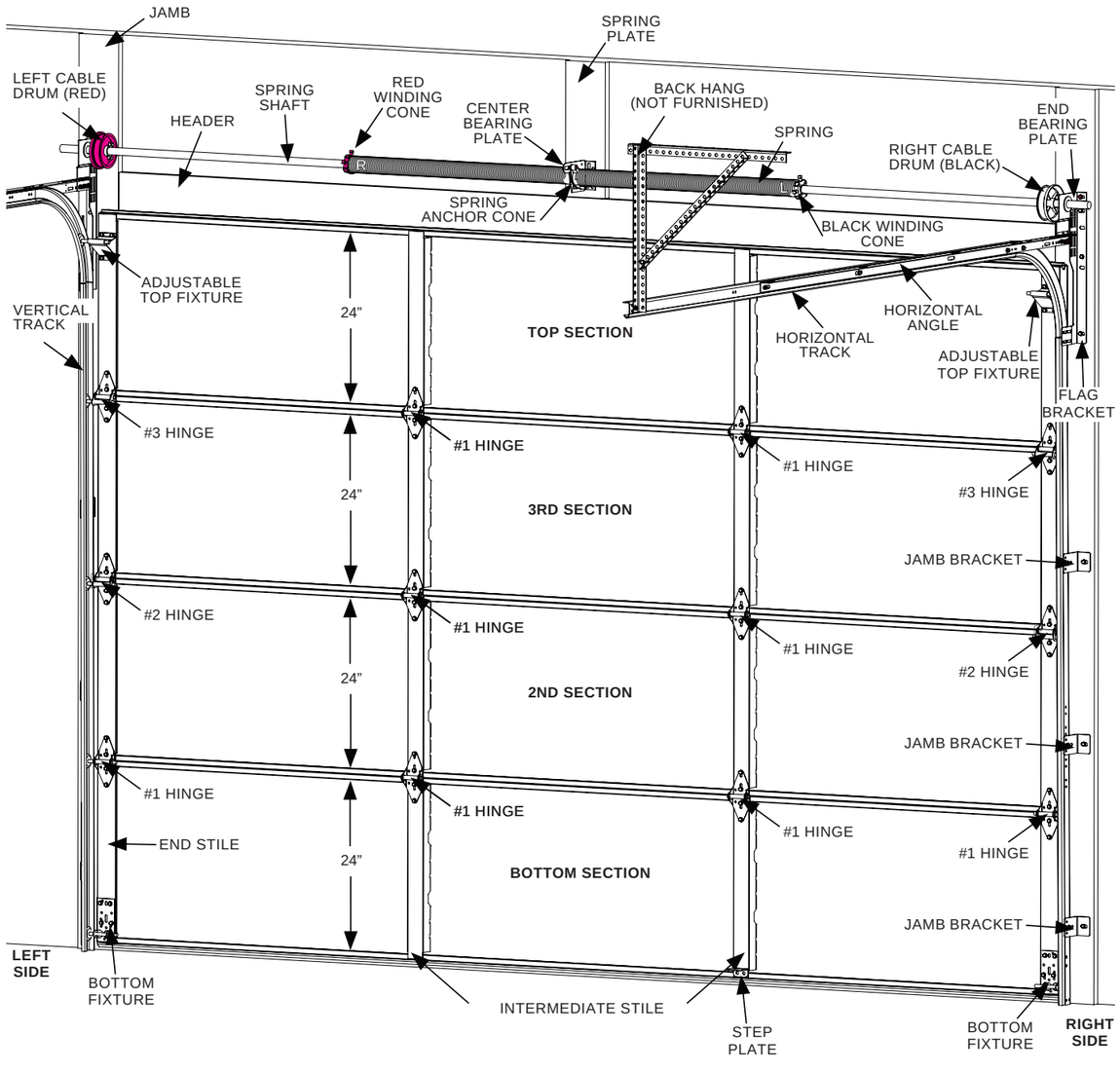

NOTE: INSTRUCTIONS REFER TO RIGHT AND LEFT HAND PARTS AS THOUGH FACING THE DOOR OPENING FROM THE INSIDE OF THE GARAGE DOOR

MIDLAND GARAGE DOOR MFG CO
RESIDENTIAL GARAGE DOOR **OWNERS MANUAL**

STEP 1:
PREPARE OPENING Check that the opening is ready. Check that the rough opening equals the door size. Check that the required headroom is available, side room, and back room according to Figure 1. The jambs need to be plumb and the header level to have a square opening. The vertical jambs and the “header jamb” should be flush with each other. The inside surfaces of the jambs where the door will mount should be free of any protruding objects, (nails, bolts, screws), that may interfere with the door. The jambs should be a substantial high quality 2 x 6 material.

STEP 2:
DOOR STOP Temporarily tack door stop in place with the flat edge placed ⅛” from the inside edge of the door jambs and header (Fig. 2). Six or seven penny galvanized nails work well. It is typical to install the top piece first and the vertical pieces second.

NOTE: DOOR STOP IS AN OPTION WHICH MUST BE ORDERED IN ADDITION TO THE DOOR PACKAGE.

STEP 3:
ORGANIZE Set the saw horses up in a clear convenient area. Be sure there is nothing on the sawhorses that will dent or scratch the sections Spread the hardware out on the floor near the saw horses. Organize it into groups to easily find the parts. Organize the fasteners in the hardware box in the same manner.

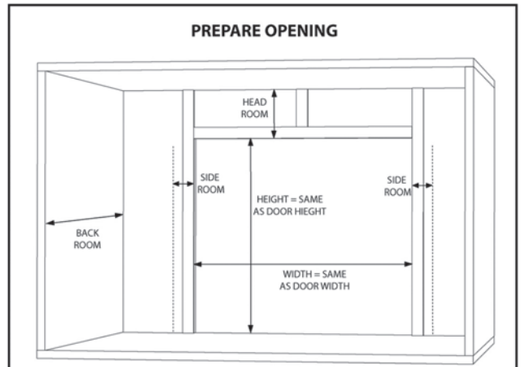

TYPE OF TRACK	HEADROOM*	SIDEROOM	CENTER POST
15" RADIUS	16"	3 1/2"	7"
12" RADIUS	13"	3 1/2"	7"
LOW HEADROOM DOUBLE TRACK	8"	4 1/2"	9"
BACKROOM REQUIRED = DOOR HIEGHT PLUS 20"			
*ADD 3" HEADROOM REQUIRED FOR ELECTRIC OPENER			

Figure 1

- CAUTION -

NEVER INSTALL DOOR COMPONENTS DIRECTLY ON A SOFT SURFACE LIKE SHEETROCK OR BUFFALO BOARD!

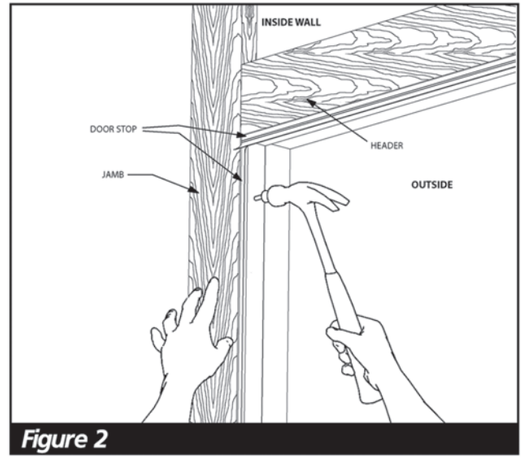

Figure 2

STEP 4:

BOTTOM SECTION

ATTACHING PARTS Lay bottom section across saw horses. The left and right bottom fixtures are attached together. Bend them back and forth at the joining tabs until they separate. Position bottom fixtures along bottom edge of end stiles. Locate the Safety Bolt Bag which contains the red head fasteners. Use the ¼" x ¾" RED HEAD self tapper to fasten the bottom fixtures to the door. (Fig. 3) Attach looped ends of cables to each bottom fixture.

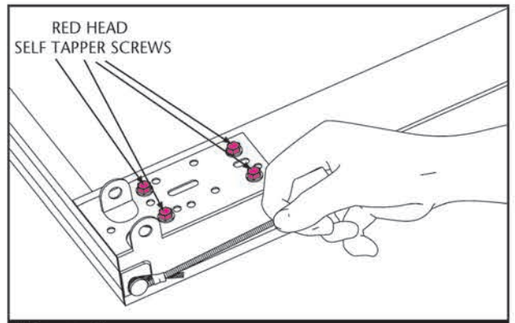

Figure 3

Reference (Fig. 4) A and B to properly locate and orient the hinges on the end stiles. (A #3 hinge is shown, which is typical of standard hinges.) A Low Profile hinge and roller bracket is shown (Fig. 4) C. Mount the hinge flush to the end of the section. Position A #1 hinge over the pre-punched holes at the top of the section on each intermediate stile and end stile. Fasten hinges with ¼" x ¾" self tappers.

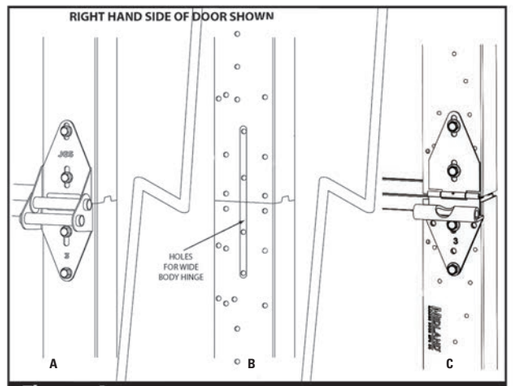

Figure 4

ThermoGuard Doors will have a Tog-L-Loc indent.

NOTE: FOR LOW HEADROOM APPLICATIONS, REFER TO PAGE 30

STEP 5:

BOTTOM SECTION STEP PLATE Two step plates are provided with the door. (Fig. 5)

NOTE: DETERMINE IF DOOR HAS LIFT HANDLES FOR THE SECOND SECTION INSTEAD OF THE KEYED LOCK. IF THERE ARE LIFT HANDLES NOTE THAT THEY ARE A SMALLER VERSION OF THE STEP PLATE. USE CARE TO PUT THE STEP PLATES ON THE BOTTOM SECTION AND THE LIFT HANDLES ON THE SECOND SECTION.

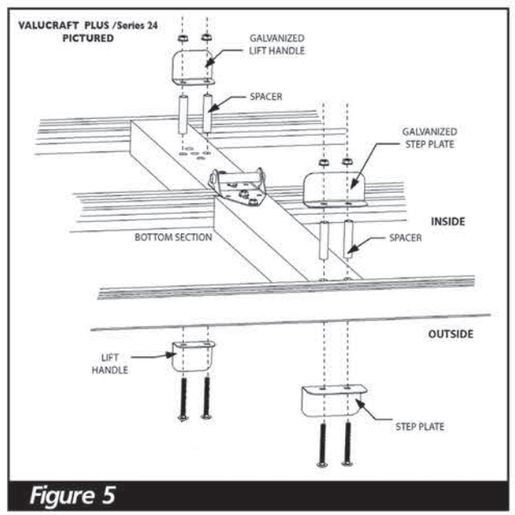

Figure 5

MIDLAND GARAGE DOOR MFG CO
RESIDENTIAL GARAGE DOOR **OWNERS MANUAL**

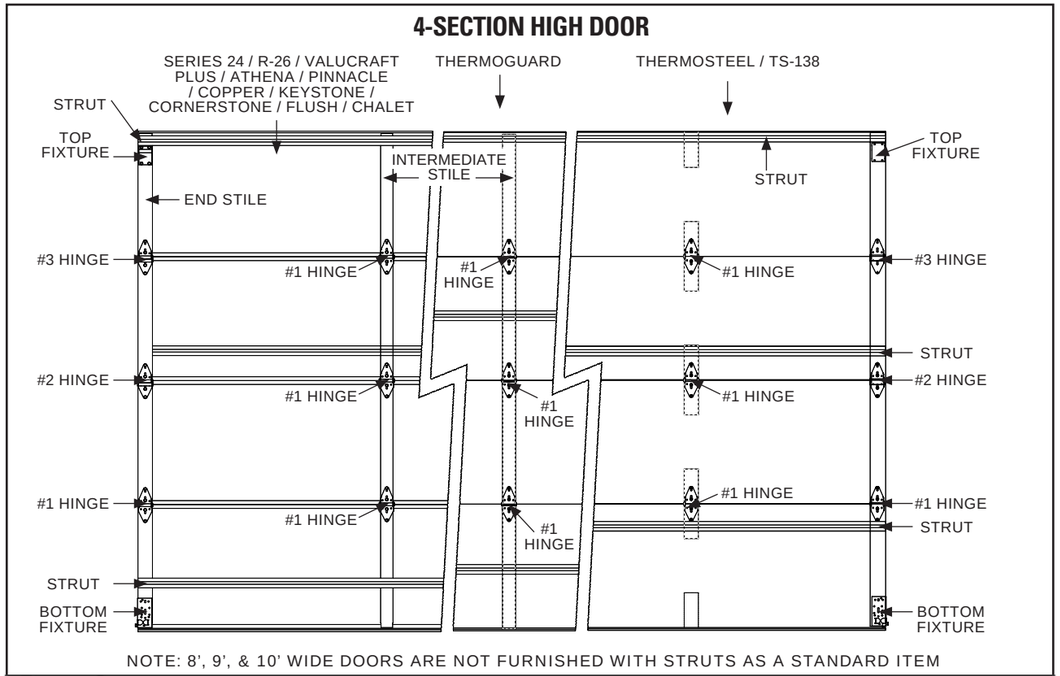

Figure 6

The step plates should be attached to the stile directly under the lift handle/lock and positioned at the bottom edge of the bottom section.

SEE THE "GRIP POINT COMPLIANCE" INSET (PAGE 10) TO HELP DETERMINE PROPER PLACEMENT OF THE STEP PLATE AND KEYED LOCK/LIFT HANDLE.

If **Series 26**, **VALUCRAFT PLUS**, or **Series 24, Keystone, Cornerstone** door, use holes in the stile as the template to locate holes. Drill two 5⁄16" holes in the face of the door.

If **ThermoSteel**, **ThermoGuard**, or **ThermoSteel 1⅜" FullView, Flush, Copper, Chalet, Athena** door, use the step plate as a template to locate holes in the proper position. Drill two 7⁄16" holes through the door.

NOTE:
• WHEN DRILLING HOLES USE CARE TO DRILL STRAIGHT AND TRUE. THE OTHER END OF THE HOLE WILL LOCATE THE STEP PLATE ON THE OUTSIDE OF THE DOOR. INSERT THE SPACERS. FASTEN STEP PLATES TO INSIDE AND OUTSIDE OF SECTION USING THE TWO PAINTED CARRIAGE BOLTS AND ¼" FLANGE NUTS PROVIDED.

• IF STEP PLATE AND LIFT HANDLES ARE UNPAINTED, THE CARRIAGE BOLTS WILL BE UNPAINTED AS WELL.

- CAUTION -

DO NOT OVERTIGHTEN BOLTS ON STEP PLATE.

GRIP POINT COMPLIANCE

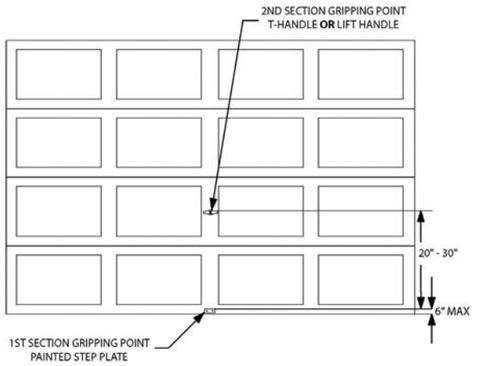

DASMA, at the urging of CPSC, adopted a voluntary industry standard to reduce or eliminate the possibility of injuries due to fingers becoming trapped between garage door sections. That standard, DASMA/ANSI 116 became effective on July 1, 2001.

Midland Garage Door Manufacturing Company will comply with the standard by furnishing the hardware for four gripping points to be installed on all residential doors. Two gripping points must be installed on the outside of the door and two gripping points must be installed on the inside of the door.

On the bottom section the gripping point must be located within 6 inches of the bottom of the door. On the second or third sections from the bottom of the door the gripping point must be in line with the lower gripping point and at least 20 inches above and no more than 30 inches above the lower gripping point. If a gripping point is installed within 4 inches of a section joint it must be installed so as to promote vertical orientation of the hand.

STEP 6:

BOTTOM SECTION & STRUTS

If one strut is furnished with the door, it will be fastened above the top fixture on the top section (Fig. 6). If two struts are furnished with the door, one will be for the top section as described above, and the second strut will be located on the section above the bottom section. If three struts are furnished, they should be located on the top, bottom and third section up from the bottom (Fig. 6). **NOTE: If one strut is a 3" strut (ie: 3" tall vs 2" tall), that strut will be used at the top of the top section.**

- IMPORTANT -

STRUT LOCATION ON THE SECTIONS

Struts go in different places on different types of doors. Identify door on Figure 6 (page 9) and in the following text. Place the struts accordingly.

SERIES 24, VALUCRAFT PLUS, SERIES 26

Struts (except top and window sections) should be positioned in the middle of the section. Top and window section struts should be placed as close to the top of the section as possible.

THERMOSTEEL OR THERMOSTEEL 1⅜"

Struts should be positioned at the top of the section.

ATHENA

If low profile hardware is used, place top angle strut at top of section. Place other angle struts on the bottom of intermediate sections to keep struts out of line of sight. If standard hardware is used, place top section strut at the top of the section. Place other struts below the hinges.

- CAUTION -

ALL THERMOSTEEL DOORS HAVE A STEEL PLATE LOCATED UNDER THE SKIN TO WHICH HINGES, STRUTS AND OPERATOR ARMS "MUST BE FASTENED." THE PLATE IS APPROXIMATELY 2½" WIDE AND EXTENDS DOWN 7" FROM TOP OF SECTION AND UP 7" FROM BOTTOM. STAY WITHIN THIS AREA WHEN FASTENING HINGES, STRUTS AND OPERATOR ARM TO THE DOOR. PLEASE REFER TO FIGURE 6 FOR THE STRUT LOCATION ON THE MODEL DOOR.

MIDLAND GARAGE DOOR MFG CO
RESIDENTIAL GARAGE DOOR **OWNERS MANUAL**

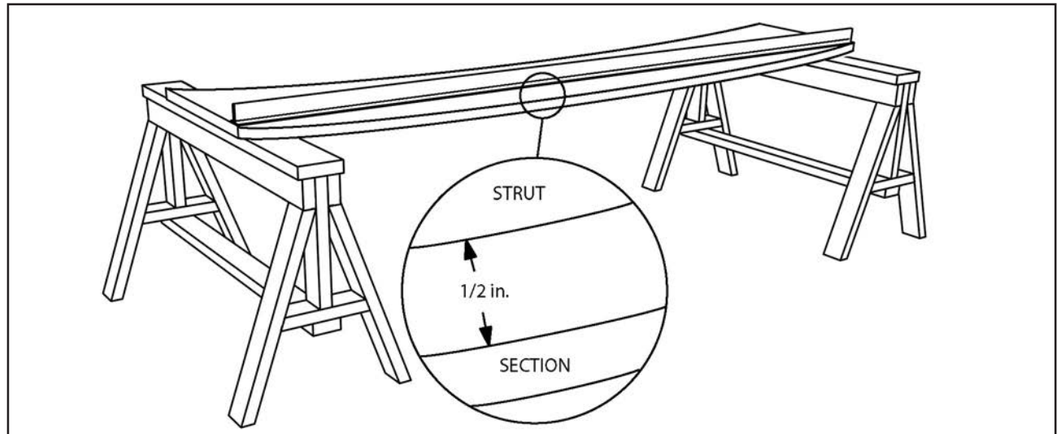

Figure 7

FULLVIEW

Position top struts at the top of the section. Position other struts below the hinges.

THERMOGUARD

ThermoGuard doors have a plate that runs vertically full height of the section. Position top section struts at top of section. Bottom and other struts should be positioned in the middle of the section.

INSTALL THE STRUT To install a strut on a section, place the section on saw horses and place the strut in position on the section. Adjust the sawhorses in or out so the section sags ½" or so under the strut. (Fig. 7). First fasten strut to end stiles on both ends with ¼" x ¾" self tappers. Then fasten strut to center stile with ¼" x ¾" self tappers. Finally fasten strut to any remaining intermediate stiles.

NOTE: PRE-PUNCHED HOLES IN STRUTS DO NOT ALWAYS ALIGN WITH THE STILES.

STEP 7:

BOTTOM SECTION REMOVE THE PROTECTIVE FILM FROM THE OUTSIDE FACE OF THE SECTION. The film is not UV stable and can deteriorate and leave residue on panel if not removed. To aid removal use a knife to **LIGHTLY** scribe a line where the film runs under the end stiles and the aluminum bottom astragal retainer.

STANDARD TRACK INSTALLATION STEPS 8A - 14A. REVERSE ANGLE TRACK INSTALL PAGE 17, STEPS 8B - 14B

STEP 8A:

BOTTOM SECTION Position bottom section inside opening and against door stops. The bottom section MUST be leveled by temporarily shimming low side. Once the bottom section is level and centered in the opening, secure it in place by driving a nail slightly into the jamb and bending it over section. Do this on each end. (Fig. 8).

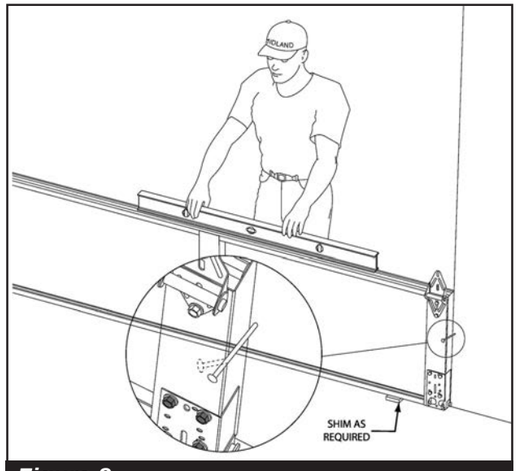

Figure 8

Residential Doors

DOOR HEIGHT	6’	6’3”	6’6”	6’9”	7’	7’3”	7’6”	7’9”	8’
TOP SECTION (4 HIGH)	-	21”	21”	21”	21”	24”	24”	24”	24”
3rd SECTION	24”	18”	18”	18”	21”	21”	21”	21”	24”
2nd SECTION (Lock)	24”	18”	18”	21”	21”	21”	21”	24”	24”
BOTTOM SECTION	24”	18”	21”	21”	21”	21”	24”	24”	24”

STEP 9A:

Use the chart above to determine how doors with different section heights will be stacked.

STEP 10A:

SECOND SECTION Remove the film from the section. Position the proper hinges at the top of the section in the same manner as the bottom section. Use #2 hinges on the end stiles and #1 hinges on the intermediate stiles as required. See Figure 9. Fasten hinges with ¼” x ¾” self tappers.

STEP 11A:

SECOND SECTION The Second section will have a T-Handle or a Lift Handle depending on the option chosen. This serves as the second grip point for the door. Use the appropriate instruction below:

LIFT HANDLE Two lift handles are provided with the door. (Fig. 5, page 8)

The lift handles should be attached to the stile directly above the step plates positioned at the bottom edge of the bottom section.

DRILL THE HOLES If **Series 26**, **VALUCRAFT PLUS**, or **Series 24** door, use holes in the stile as template. Drill two 5⁄16” holes in the face of the door. See Figure 10.

MIDLAND GARAGE DOOR MFG CO
RESIDENTIAL GARAGE DOOR **OWNERS MANUAL**

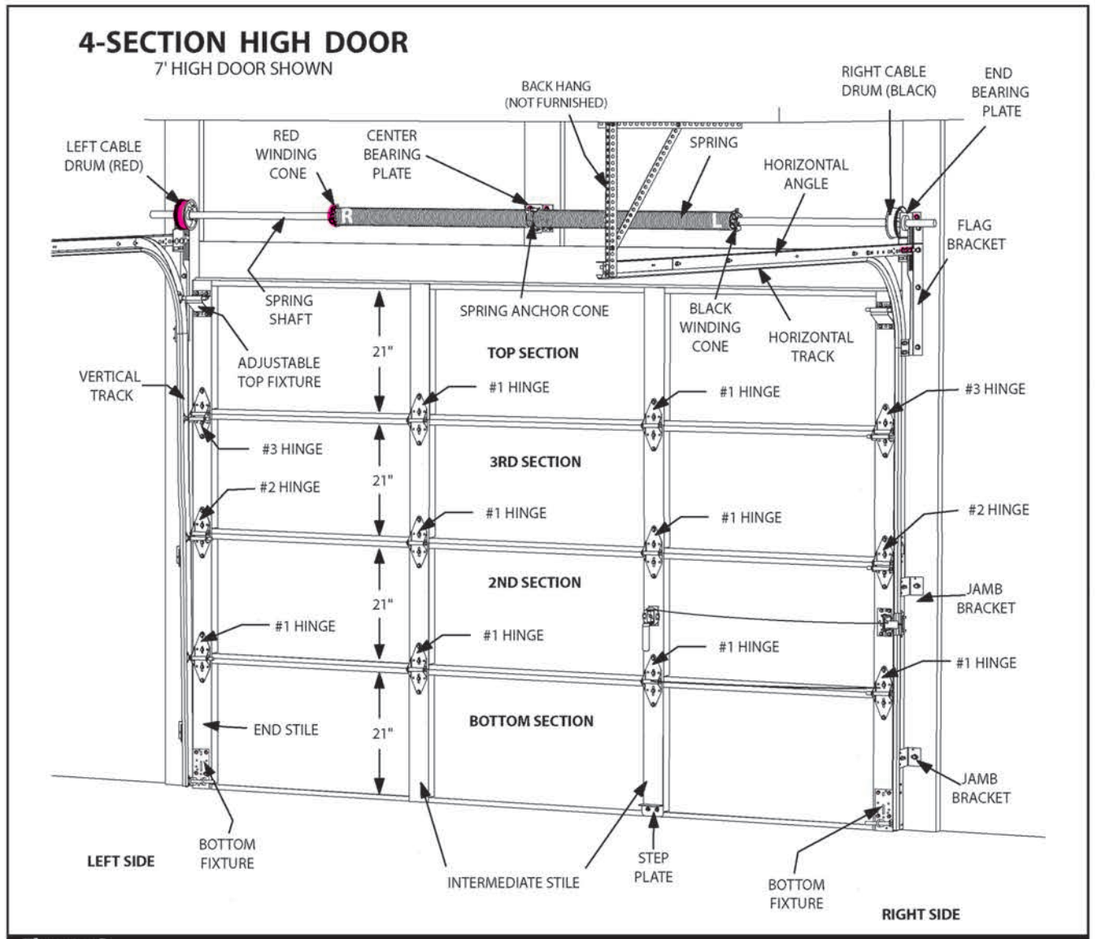

Figure 9

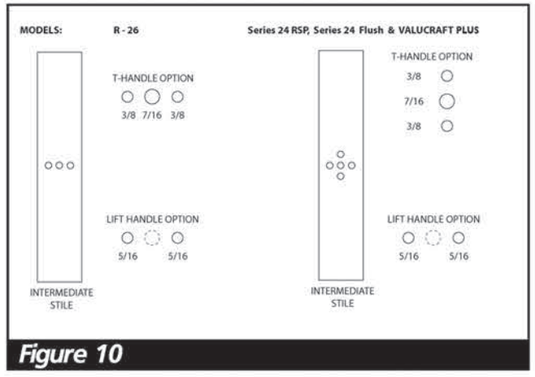

Figure 10

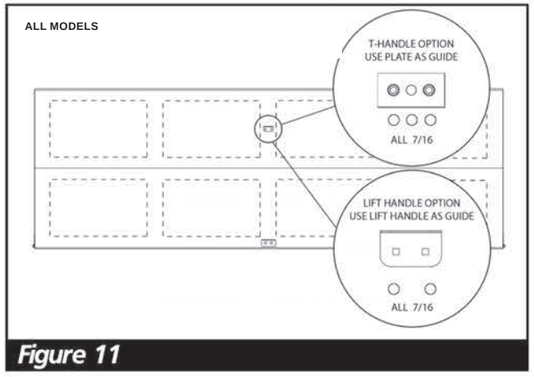

Figure 11

If **ThermoSteel**, **ThermoGuard**, **ThermoSteel 1⅜”**, & Athena, Chalet, Pinnacle, use the lift handle as a template to locate holes in proper position. Reference the “Grip Point Compliance” inset (page 10) and (Fig. 11) to assure proper location. Drill two 7⁄16” holes through the door.

NOTE:

• When drilling use care to drill straight and true. The other end of the hole will locate the lift handle on the outside of the door. Insert the spacers. Fasten lift handles to inside and outside of section using the two carriage bolts and ¼” flange nuts provided.

• DO NOT OVERTIGHTEN BOLTS ON LIFT HANDLE

T-HANDLE INSTALL THE LOCKING T-HANDLE AS FOLLOWS:

The T-Handle should be attached to the stile directly above the step plate positioned at the bottom edge of the bottom section.

DRILL THE HOLES If **Series 26**, **VALUCRAFT PLUS**, or **Series 24** door, using holes in stile as template. Drill two ⅜” holes and one 7⁄16” hole in the face of the door as shown in (Fig. 10).

If **ThermoSteel**, **ThermoGuard**, or **ThermoSteel 1⅜”** & Athena, Chalet, Pinnacle, use the back plate, (Fig. 12 a item 8 and Fig. 11) as a template to locate holes in proper position.

NOTE: On the Series 24 series doors locating the T-Handle between the exterior Raised Steel Panels on the face of the door. Reference the “Grip Point Compliance” inset (page 10) to assure proper location. Drill three 7⁄16” holes through the door as shown.

ASSEMBLY Slide spacers (Fig. 12-a-5) over studs on T-handle (Fig. 12. g). **ThermoSteel 1⅜”** *doors will not use the tube spacers.* Insert T-Handle in face of door. Using two bolts provided (Fig. 12-a-2), fasten plate (Fig. 12. g) to T-handle to hold in place. Slide handle (Fig. 12. g) over square shaft with handle in down position using tinnerman washer nut (Fig. 12-a-1) to hold handle in place. Fasten latch (Fig. 12.c) to track on left or right hand side with track bolts and nut (Fig. 12-a-4). Fasten spring latch (Fig. 12. e) to end of section using speed teks (Fig. 12-a-3). Slide cable through handle and then through spring latch. Fasten cable to spring latch by inserting track bolt (Fig. 12. i) and tighten cable. Cut off excess cable.

STEP 12A:

SECOND SECTION Stack the section in the opening. Maintain in position by driving a nail slightly into the jamb and bending it over the section as with the bottom section. Fasten hinges between the stacked sections with ¼” x ¾” self tappers.

STEP 13A:

REMAINING INTERMEDIATE SECTIONS

Install the required hinges and struts on the remaining intermediate sections and stack them in the opening. Be sure to remove the protective film.

MIDLAND GARAGE DOOR MFG CO
RESIDENTIAL GARAGE DOOR **OWNERS MANUAL**

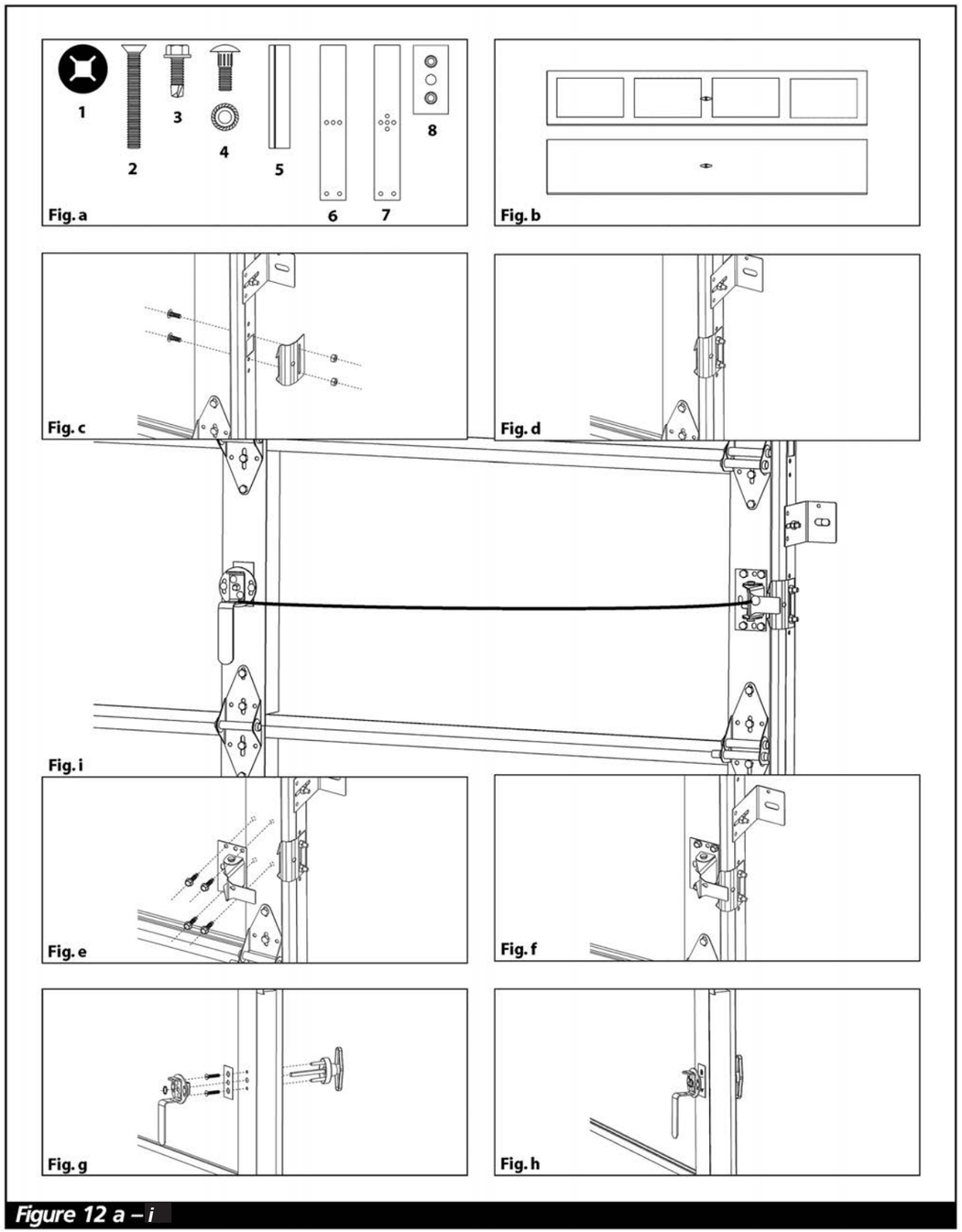

Figure 12 a – i

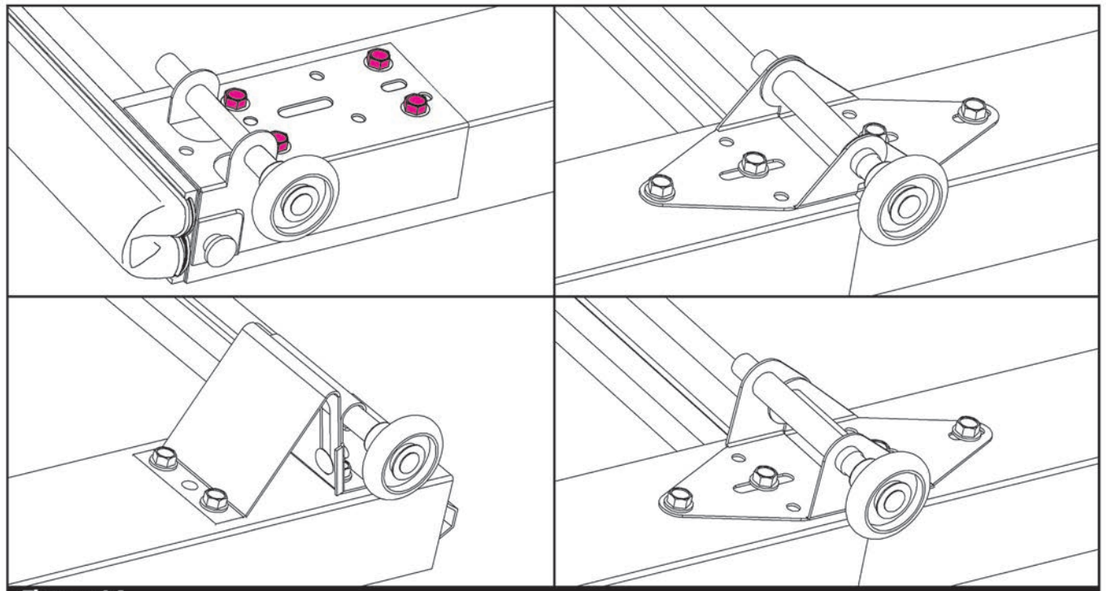

Figure 14

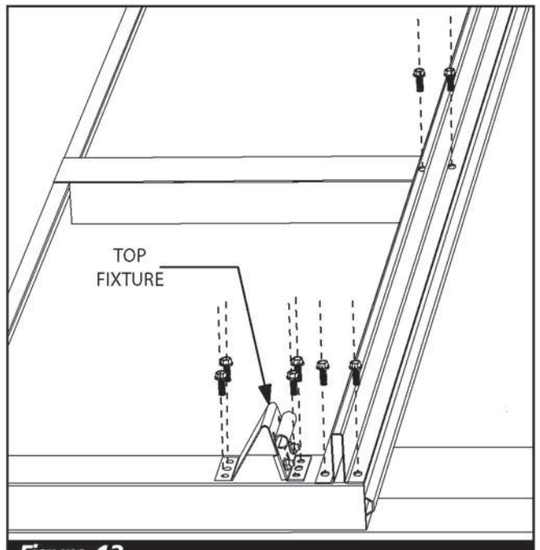

Figure 13

STEP 14A:

TOP SECTION Lay top section across saw horses and remove the protective film. If strut is required, position it at the very top of the section and fasten according to instructions in step 6. (Fig. 13) Position top fixture directly below strut with the adjusting bolts facing up. Attach to section with ¼" x ¾" self tappers. Loosen the two ¼" nuts on each top fixture so that the roller carrier can slide in and out for later adjustment.

FOR LOW HEADROOM APPLICATIONS, REFER TO PAGE 30.

NOTE: IF AN ELECTRIC OPENER IS TO BE ATTACHED TO THIS DOOR, THE TOP SECTION MUST BE REINFORCED WITH A STRUT AND THE OPERATOR ARM MUST BE ATTACHED SO THAT IT IS APPROXIMATELY IN LINE WITH THE TOP ROLLERS, IF THESE INSTRUCTIONS ARE NOT FOLLOWED THE WARRANTY WILL BE INVALID.

Stack top section in opening. Maintain position by driving a nail slightly into the jamb and bending it over the section. Fasten hinges from section below to the top section with ¼" x ¾" self tappers.

MIDLAND GARAGE DOOR MFG CO
RESIDENTIAL GARAGE DOOR **OWNERS MANUAL**

REVERSE ANGLE TRACK INSTALLATION

STEP 8B:

BOTTOM SECTION

REMOVE THE PROTECTIVE FILM FROM THE OUTSIDE FACE OF THE SECTION. To aid removal use a knife to LIGHTLY scribe a line where the film runs under the end stiles and the aluminum bottom astragal retainer.

Install the hinges, rollers, and bottom fixtures (Fig. 15).

NOTE: IF THERE ARE TWO ROLLERS THAT ARE LONGER THAN ALL THE REST THEY WILL GO IN THE BOTTOM FIXTURES.

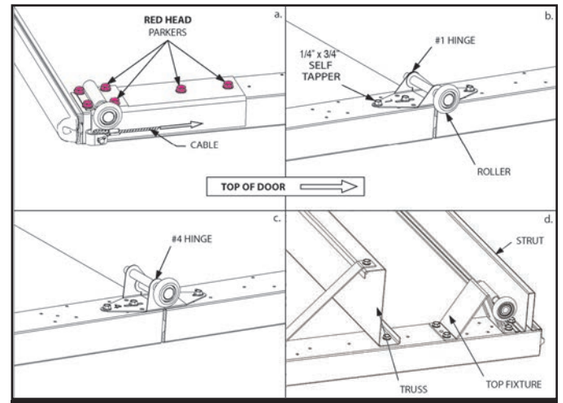

Figure 15

STEP 9B:

INSTALL THE BOTTOM SECTION AND REVERSE ANGLE TRACK

Determine type of track and jamb and follow the appropriate instructions below:

PREP THE REVERSE ANGLE VERTICALS:

Loosen the 1/4" track bolts that fasten the track to the angle mount so the track can be adjusted in and out.

Position the bottom section inside the opening against the jambs. The bottom section must be leveled by temporarily shimming up the low side. Use a 2' or 4' level. Center the section in the opening (Fig. 16).

Hook vertical track over the rollers on the end of the bottom section and swing it into place against the jamb (Fig. 17). Position bottom of track 1/2" or so above floor (It works well to set the track on a block of wood to hold it at the proper height.).

Raising the tracks allows adjustment in and out and will reduce corrosion. Position vertical track so that the tops of both sides are level with the other. Since the bottom section is level, level the

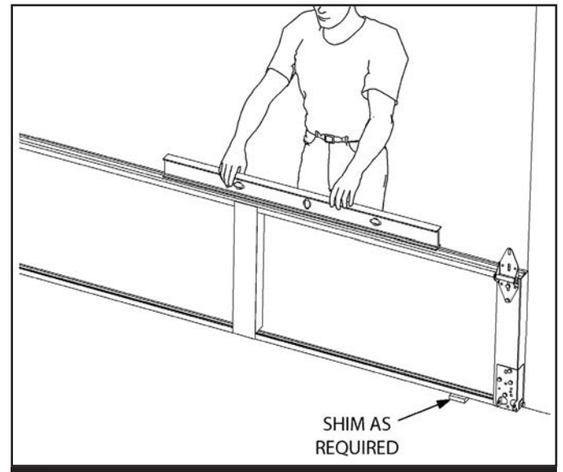

Figure 16

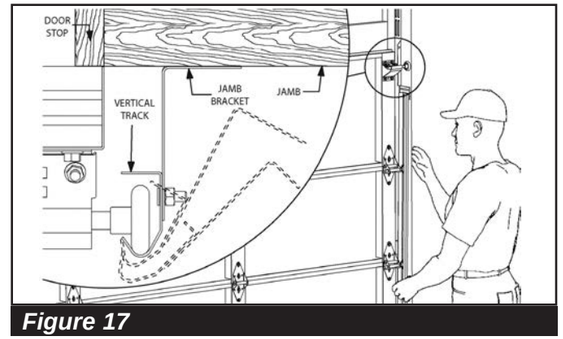

Figure 17

top of the vertical track by measuring from the top of the vertical track to the top of the bottom section and setting both vertical tracks at the same distance.

Also, the two vertical tracks will be installed in a “wedge” shape compared to the door. Space the bottoms of the tracks 3/8” from the door and space the tops of the tracks 5/8” from the door. This has the effect of centering the door every time it goes up and down.

Fasten the angle mount (or jamb brackets) to the jamb with the appropriate fasteners. For **STEEL JAMBS** use 5/16” X 1” self tappers. For **WOOD JAMBS** make a 1/4” pilot hole and use 5/16” x 1 5/8” wood lags.

NOTE: Enough fasteners are provided to anchor the angle mount to the jamb approximately every 2’. Start at the lower most hole and work up from there. There may be holes that are unused.

STEP 10B:
SECTION PLACEMENT
If door has a combination of 18” and 21” or 21” and 24” sections, decide which sections will be placed where in the door. If door has only one larger section, the factory will make it into a bottom section. If there are two larger sections, one will be the bottom and the other should be the top. After this, as a general rule ,place the larger sections toward the bottom and the smaller sections toward the top.

NOTE: If there is a “TOP SECTION” with a center stile (for a drawbar operator), ensure that it is used at the top of the door.

STEP 11B:
SECOND SECTION PREP
Remove the film from the section. Position the proper hinges at the top of the section in the same manner as with the bottom section. Use the next size larger hinges on the end stiles and #1 hinges on the intermediate stiles as required (Fig. 4). Fasten hinges with 1/4” x 3/4” self tappers.

NOTE: LEAVE THE HINGE / ROLLER OFF THE RIGHT SIDE. THEY WILL BE INSTALLED AFTER THE SECTION IS STACKED IN THE OPENING.

Install the strut as required. If a keyed lock is utilized install it in the second section using the instructions in the commercial keyed lock package.

STEP 12B:
STACK SECOND SECTION
Stack the second section in the opening. Hook the roller on the left side of the section into the track and swing the section into the opening (Fig. 19). Install the right hand hinge/roller assembly.

NOTE: If desired leave all the end hinges off, stack the section in the opening and then install both sets of end hinges with rollers.

(Fig. 20) shows a method of clamping the section in place with a vise grip until the end hinges are installed. Fasten hinges from the bottom section to the second section using the 1/4” x 3/4” self tappers.

STEP 13B:
REMAINING SECTIONS
Add appropriate hardware and install the remaining sections. If there is a window section ensure it will go in the proper place. **REMOVE THE PROTECTIVE FILM FROM ALL SECTIONS**

MIDLAND GARAGE DOOR MFG CO
RESIDENTIAL GARAGE DOOR **OWNERS MANUAL**

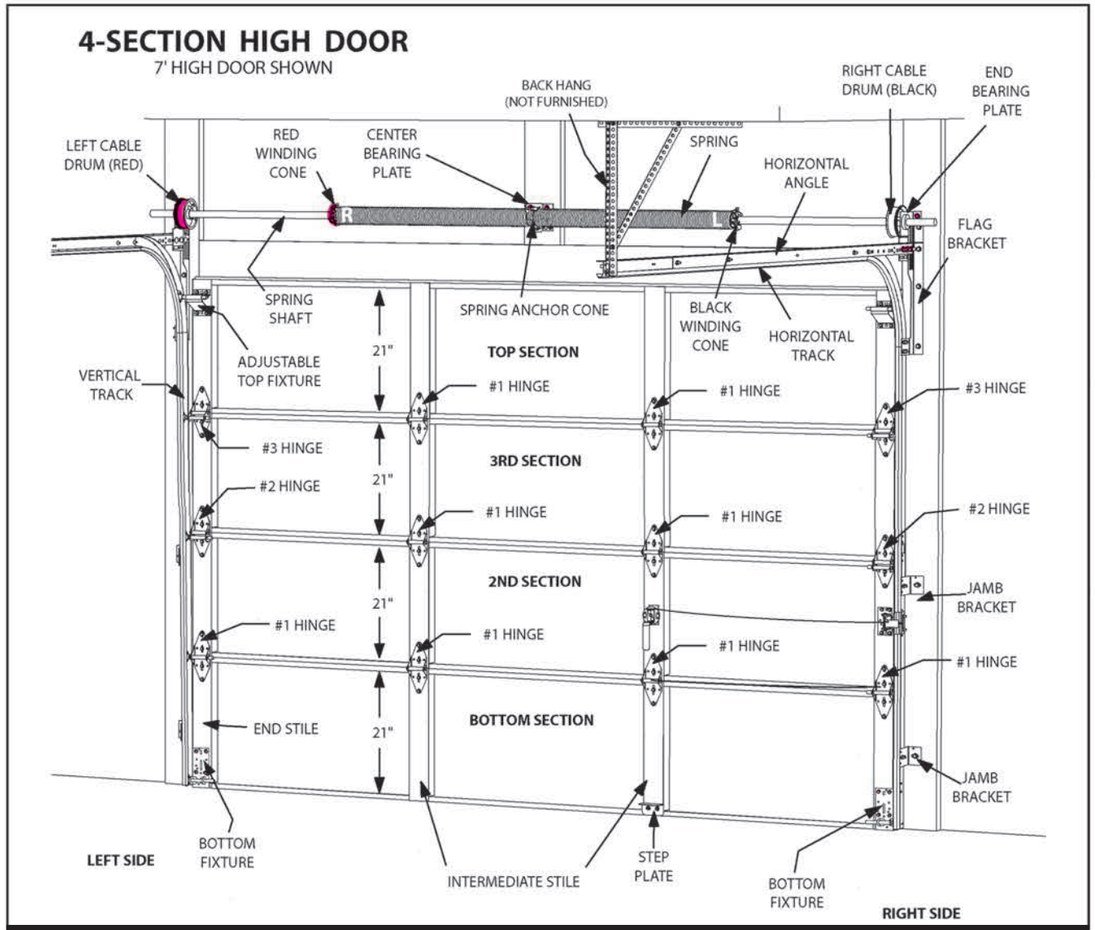

Figure 18

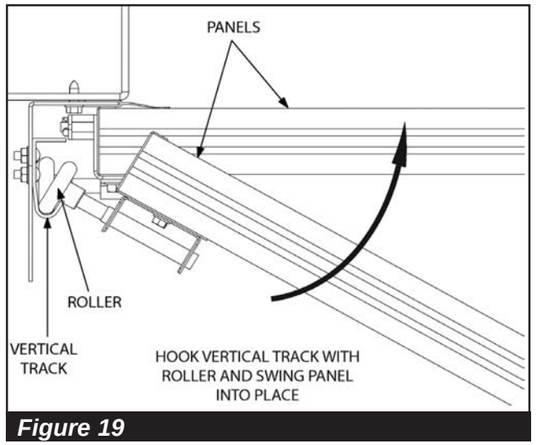

Figure 19

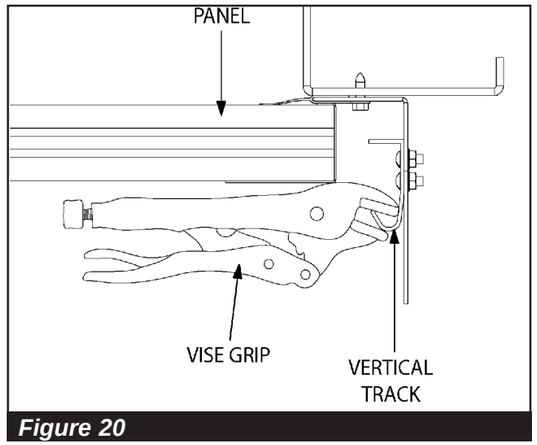

Figure 20

STEP 14B:
TOP SECTION PREP
FOR LOW HEADROOM APPLICATIONS REFER TO PAGE 30

If a strut is required, place the strut at the very top of the section and fasten according to instructions in Step 6. Position the top fixture directly below the strut with the adjusting bolts facing up. Attach to the section with 1/4" x 7/8" self tappers. Loosen the two 5/16" nuts on each top fixture so that the roller carrier can slide in and out for later adjustment. **IF DOOR HAS NO TOP STRUT, PLACE THE TOP FIXTURES 2 1/2" BELOW THE TOP OF THE SECTION.**

STACKING THE TOP SECTION: Either: 1) Stack the top section now and hold it in place with nails, clamps, C clamps, or vise grips, as required or 2) Wait to stack the top section until the horizontal tracks are installed.

STEP 15:
Insert rollers in all outside hinges in lowest holes and in bottom fixture (Fig. 14). When hinges have more than one tube, the roller will always go in the tube that's the farthest from the face of the door.

STEP 16:
VERTICAL TRACK

NOTE: IF LOW HEAD ROOM TRACK **ASSEMBLY, THE FLAG BRACKETS ARE PRE-ASSEMBLED WITH THE HORIZONTAL TRACKS. SEE FIGURE D (page 31). DISREGARD THE STEPS FOR FLAG BRACKETS IN THE FOLLOWING.**

FLAG BRACKETS Fasten flag bracket to vertical track with ¼" x ⅝" track bolts and ¼" flange nuts (Fig. 21). **FINGER TIGHTEN ONLY.**

NOTE: ALL TRACK BOLTS SHOULD BE INSTALLED WITH THE NUTS ON THE OUTSIDE OF TRACK.

STEP 17:
JAMB BRACKETS Position jamb brackets on vertical track by matching lowest numbered jamb bracket with lowest **ADJUSTABLE SLOT**. Match remaining jamb brackets in ascending order with additional **ADJUSTABLE SLOTS** (Fig. 22). Fasten jamb brackets to vertical track with ¼" x ⅝" carriage bolts and ¼" kep nuts. **FINGER TIGHTEN ONLY**.

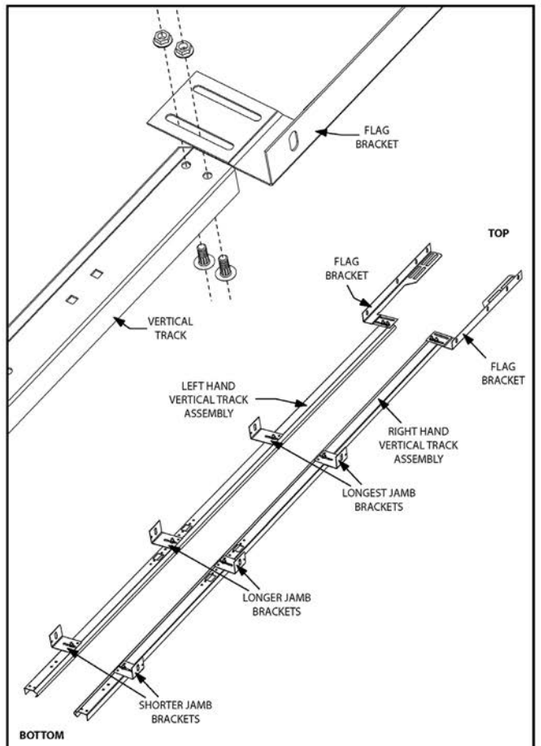

Figure 21

MIDLAND GARAGE DOOR MFG CO
RESIDENTIAL GARAGE DOOR **OWNERS MANUAL**

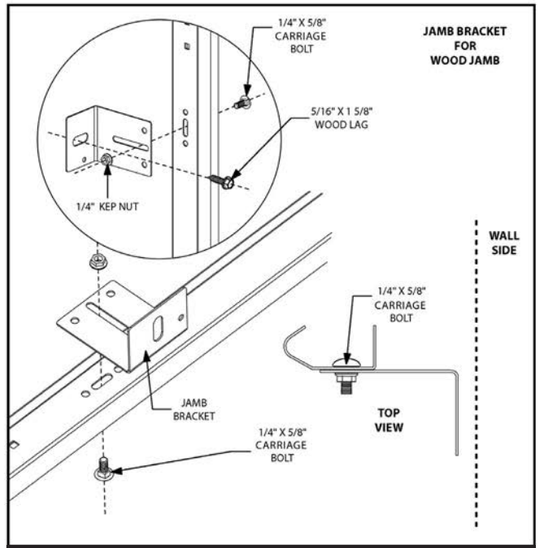

Figure 22

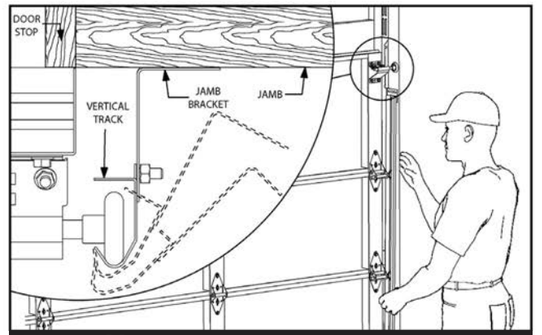

Figure 23

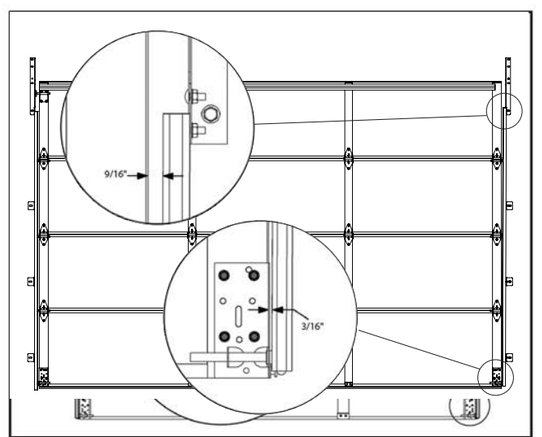

Figure 24

STEP 18:
VERTICAL TRACK
INSTALL Hook vertical track over rollers and swing into place against jamb (Fig. 23). Position bottom of track ⅜" or so above floor. (It works well to use a block of wood to set the track on to hold it at the proper height.) Raising the tracks allows adjustment in and out and will reduce corrosion.

Position vertical track so that the tops of both sides are level with the each other. Since the bottom section is level, level the top of the vertical track by measuring from the top of the vertical track to the top of the bottom section and setting both vertical tracks at the same distance.

Also the two vertical tracks will be installed in a "wedge" shape compared to the door. Space the bottoms of the tracks 3⁄16" from the door and space the tops of the tracks 9⁄16" from the door. This has the effect of centering the door every time it goes up and down. (Fig. 24). Fasten the jamb brackets and the flag bracket to the jamb with 5⁄16" x 1⅝" wood lags. Use four lag screws in the flag bracket. Ensure the flag brackets final installed position is straight up and down. Predrill with a ¼" bit to prevent the jamb from splitting.

STEP 19:
VERTICAL TRACK Snug the top of the vertical track toward the jamb against the highest roller. Tighten the track bolts in the flag bracket to hold it in position. This enables proper location of the horizontal track. Do not tighten the other jamb brackets at this time. That will be done later.

STEP 20:

HORIZONTAL TRACK To fasten the horizontal angle to the horizontal track (Fig. 25), first determine whether the door is 1⅜" or 2" thick. Then note the proper set of holes to use as stamped in the horizontal track. (Fig. 26)

Fasten horizontal angles to horizontal tracks with ¼" x ⅝" track bolts and ¼" flange nuts.

NOTE:

• DOORS THROUGH TEN FEET WIDE WILL INCLUDE (1½" X 1½" X 22") HORIZONTAL ANGLE IN THE HARDWARE BOX.

• DOORS WIDER THAN 10 FEET INCLUDE (1½" X 1½" X 82") HORIZONTAL ANGLE BANDED WITH THE TRACK.

• THE EXCEPTION TO THIS IS THE 10 X 7'6", 10 X 7'9", AND 10 X 8, ALL THERMOSTEEL, WILL USE THE 82" ANGLE.

STEP 21:

HORIZONTAL TRACK ASSEMBLY

INSTALL Fasten horizontal angle to flag brackets with ⅜" x ⅞" carriage bolt and ⅜" RED flange nut, fasten horizontal track to vertical track with ¼" x ⅝" track bolts and ¼" flange nut (Fig. 27). Level each horizontal track (Fig. 28) and temporarily tie rear end of horizontal track to ceiling (Fig. 29). Tighten all bolts on horizontal track.

STEP 22:

Remove the nails that were used to temporarily hold the sections in position.

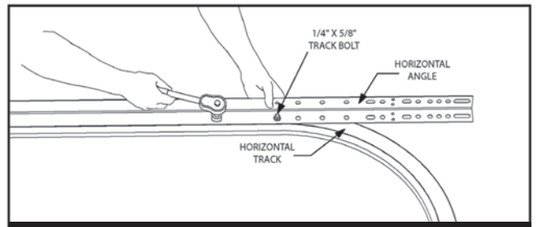

Figure 25

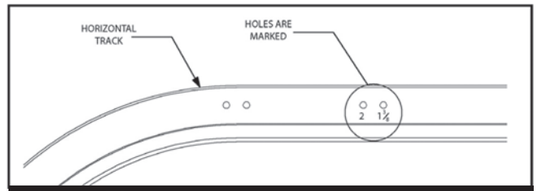

Figure 26

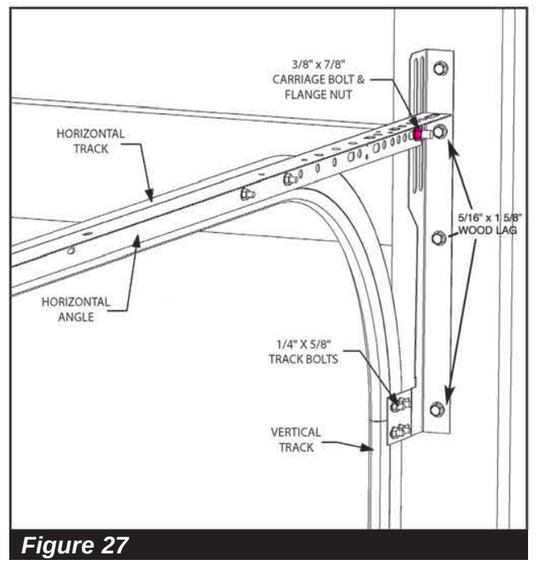

Figure 27

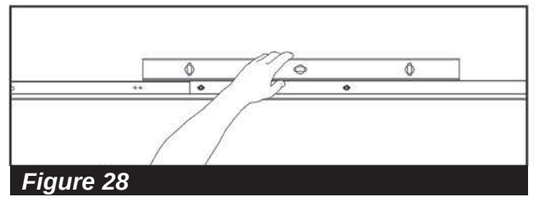

Figure 28

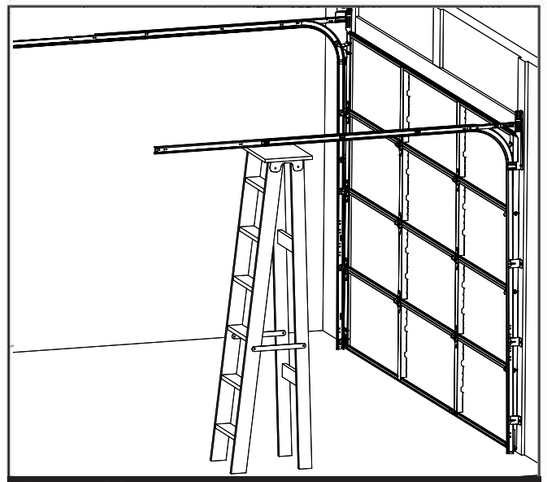

Figure 29

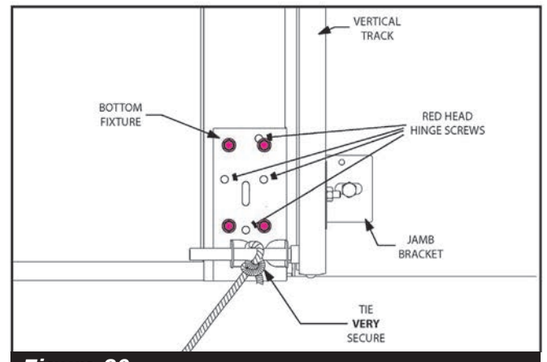

Figure 30

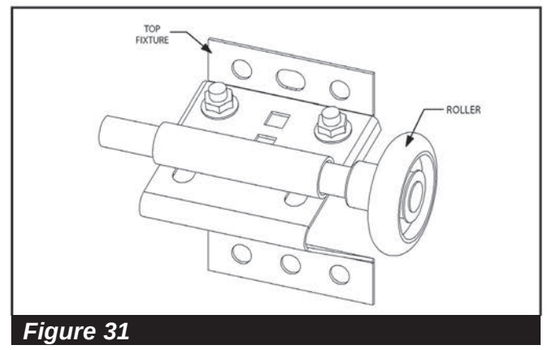

Figure 31

STEP 23:

PULL ROPE Install pull rope **ONLY IF DOOR WILL NOT BE OPERATED BY AN ELECTRIC OPENER.** Tie one end of rope to the bottom roller shaft (Fig. 30). Let opposite end of rope hang loose.

NOTE:

• 1) IF EXTENSION SPRING DOOR REFER TO THE SEPARATE INSTRUCTIONS INCLUDED IN THE HARDWARE BOX.

• 2) IF LOW HEADROOM TORSION SPRING ASSEMBLY REFER TO PAGE 30.

• 3) IF STANDARD TORSION SPRING SYSTEM PROCEED WITH STEP 24.

STEP 24:

END BEARING PLATES Slide adjustable bracket on top fixtures (Fig. 31) away from door until the top section is tight against the door stop and tighten the adjusting bolts. Fasten end bearing plates to the horizontal angle with two ⅜" x ⅞" carriage bolts and ⅜" RED flange nuts. Fasten the end bearing plates to the header with 5/16" x 1⅝" RED HEAD wood lags (See Figs. 32-10, 33-12, or 34-15, depending on the radius of the track).

STEP 25:

SPRING SHAFT ASSEMBLY Place spring shaft on saw horses. Insert nylon center bearing

(Fig. 35 a) into spring anchor cone (Fig. 35 b). Then slide spring(s) on spring shaft. **INSIDE THE BUILDING LOOKING OUT** place the spring with the RED WINDING CONE (R Spring), (Fig. 35 c) to the left side of door and the spring with the **BLACK** winding cone (L Spring), to the right side of door. Place cable drums (Fig. 35 d) on spring shaft, RED CABLE DRUM on the left side of shaft and the **BLACK CABLE DRUM** on the right side of shaft. **BE SURE** that the set screws of the cable drums are to the door side and the cable will wrap to the jamb side of cable drum. (Fig. 36 shows a proper assembly).

NOTE:
• ONLY 1 NYLON CENTER BEARING IS REQUIRED WHETHER THE DOOR IS SUPPLIED WITH ONE SPRING OR TWO.

• FOR LOW HEADROOM FRONT APPLICATIONS, REFER TO PAGE 30.

STEP 26:

CENTER BEARING PLATE Attach center bearing plate (Fig. 35 e) to the header using two 5⁄16" x 1⅝" RED HEAD wood lags in bottom slot and one RED HEADED wood lag in top slot. (Fig. 37) Predrill holes with ¼" bit to prevent wood from splitting. (SEE CAUTION). Center bearing plate must be in line with end bearing plates so the shaft line is straight. This may be accomplished by measuring from the top of the door to the center of the shaft line at the end bearing plate. Use that measurement to locate the Center Bearing Plate above the door.

BE SURE THE CENTER BEARING PLATE SHOULD BE LOCATED SO THE SPRING **WILL BE APPROXIMATELY CENTERED ON THE DOOR. FOR DOORS FURNISHED WITH**

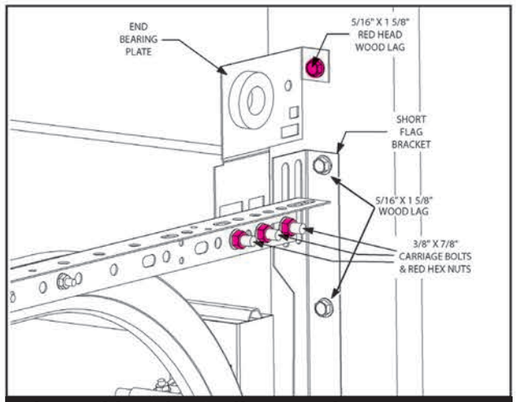

Figure 32 - 10" Radius Track

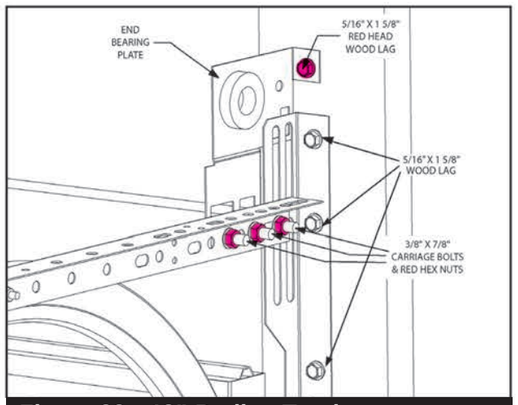

Figure 33 - 12" Radius Track

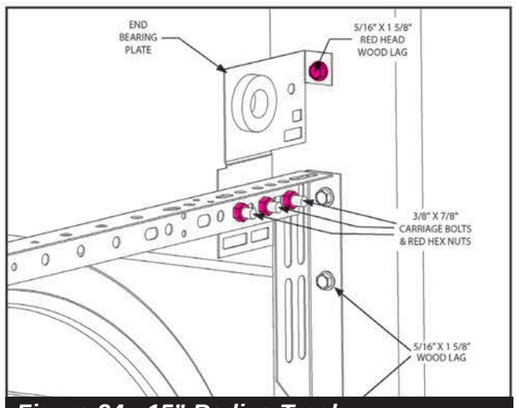

Figure 34 - 15" Radius Track

MIDLAND GARAGE DOOR MFG CO
RESIDENTIAL GARAGE DOOR **OWNERS MANUAL**

TWO SPRINGS, THE CENTER BEARING PLATE **SHOULD BE LOCATED SO IT IS APPROXIMATELY CENTERED ON THE DOOR (Fig. 36).**

- CAUTION -

The center bearing plate anchors the springs and must be fastened securely to the wall. It is critical the center bearing plate is mounted directly to the wood pad. Never mount it on top of sheetrock.

NEVER ATTEMPT TO REMOVE THE CENTER BEARING PLATE IF THE SPRINGS ARE WOUND.

STEP 27:

INSTALL SPRING ASSEMBLY Lift the spring assembly up into position. Slide left end of shaft through left end bearing plate and slide back through right end bearing plate. (It may be helpful to slightly tighten the spring set screws on the shaft to prevent the springs from moving during this process.) **SPRINGS WITH** RED **CONES (R Spring), MUST BE FACING THE LEFT SIDE OF THE DOOR AND SPRINGS WITH** BLACK **CONES (L Spring), MUST BE FACING THE RIGHT SIDE OF THE DOOR.** Fasten the anchor cones to center bearing plate with ⅜" x 1½" bolts and the ⅜" RED nuts and tighten (Fig. 37). Be sure the shaft line is straight both up and down and in and out from the wall.

NOTE: THE SPRING ANCHOR CONES MUST FIT SNUGLY AND EVENLY AGAINST THE CENTER BEARING PLATE.

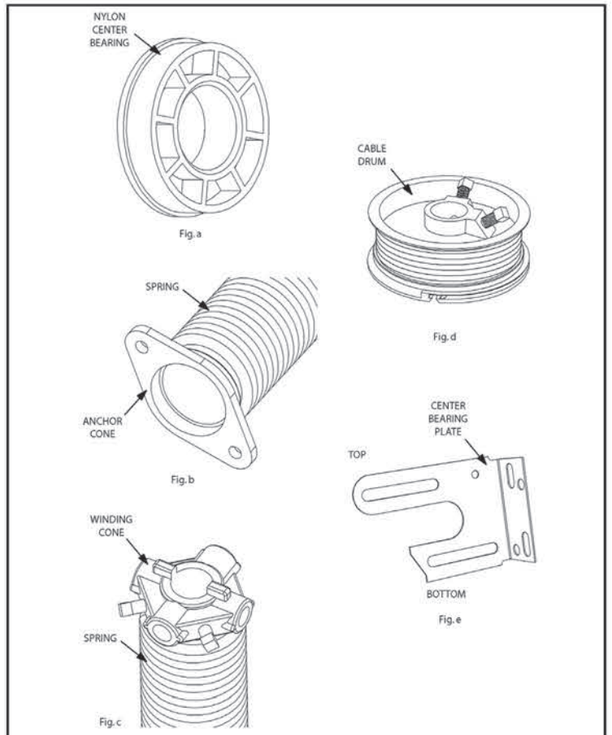

Figure 35

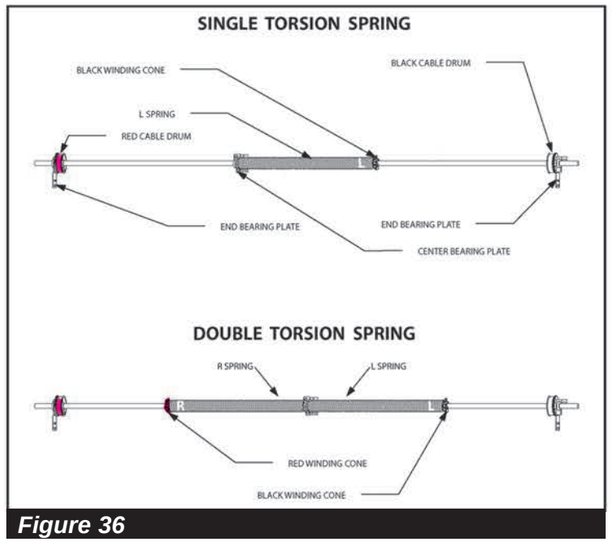

Figure 36

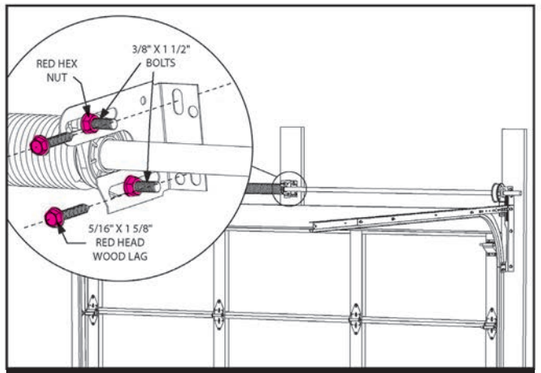

Figure 37

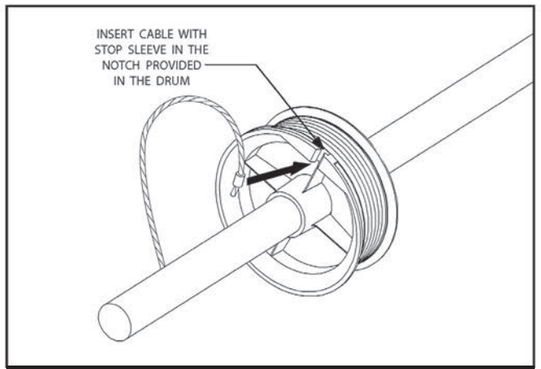

Figure 38

STEP 28:

SET THE CABLE DRUMS Center the shaft so there is an equal amount extending through the left and right end bearing plates.

Position the left (RED) cable drum tightly against the left end bearing plate and tighten the set screws. Bring cable up between wall and roller stem, behind cable drum and position cable stop into the notch on the outside edge of cable drum (Fig. 38 & 39). **ROTATE THE CABLE DRUM AND THE SHAFT UNTIL CABLE IS TIGHT.** Check to be certain the cable stop is seated against the cable drum.

Clamp a vise grip on top of the shaft and against the header to maintain cable tension (Fig. 40). Take note of the cable tension. Duplicate that on the right side.

NOTE: Tighten set screws 1 to 1½ turns after set screw touches shaft. DO NOT SEVERELY OVERTIGHTEN SET SCREWS ON DRUMS OR SPRINGS**. This would distort and weaken the shaft. The goal is to dimple the spring shaft with the set screws.**

Rotate the cable drum until this cable has the same tension as the left cable. Tighten the set screws in the sequence shown in (Fig. 41).

NOTE: CABLE TENSION ON EACH SIDE MUST BE EQUAL SO THE DOOR WILL BE LEVEL AND OPERATE PROPERLY.

STEP 29:

WINDING SPRINGS Clamp the door down.

- CAUTION -

CLAMP DOOR SECURELY CLOSED USING VISE GRIPS BEFORE WINDING ANY TENSION ONTO SPRINGS. SPRING TENSION IS DANGEROUS.

ONLY USE PROPER SIZED WINDING BARS. NEVER USE SCREWDRIVERS OR OTHER TOOLS TO WIND SPRINGS.

ENSURE LADDER IS STURDY AND STABLE AND IN THE BEST POSITION. CLEAR OTHER PERSONNEL FROM THE IMMEDIATE VICINITY.

COUNT THE TURNS Count the turns when winding the springs. Either 1) count when winding OR 2) before winding make a line across the full length of the spring(s).This will indicate the number

MIDLAND GARAGE DOOR MFG CO
RESIDENTIAL GARAGE DOOR **OWNERS MANUAL**

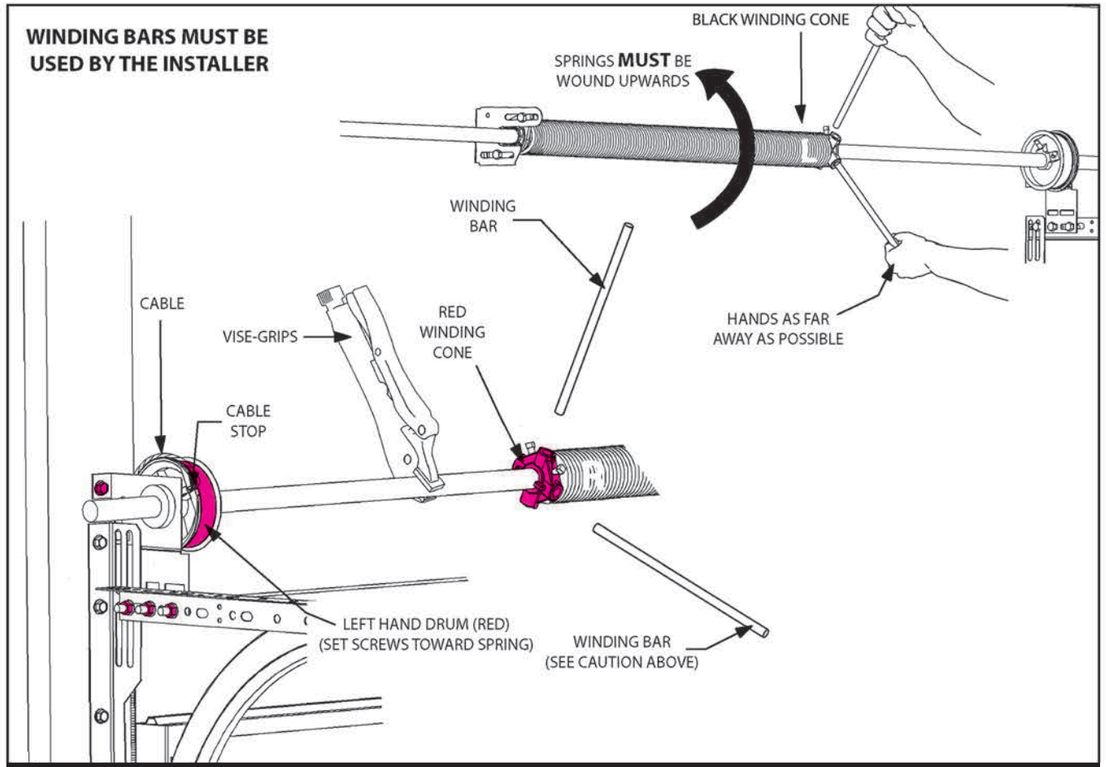

Figure 38

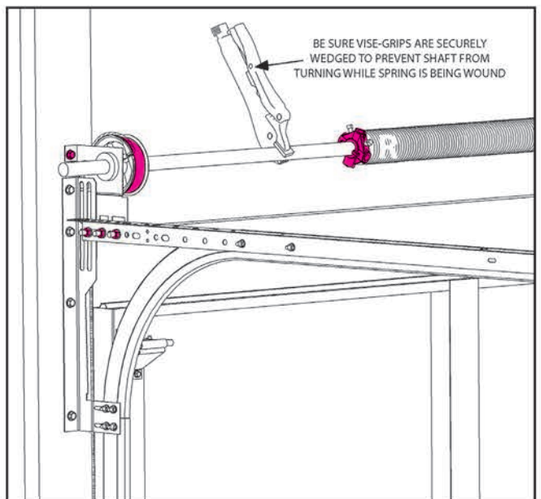

Figure 40

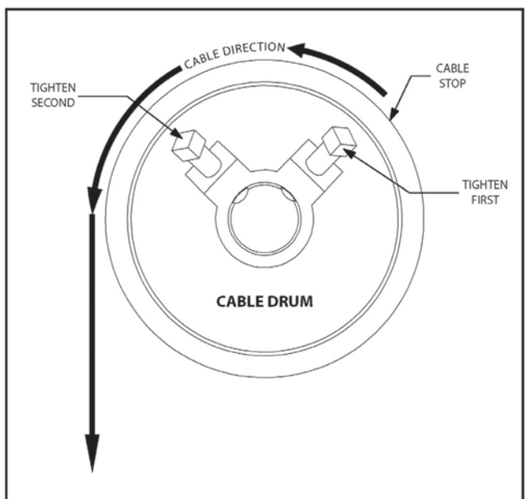

Figure 41

DOOR HEIGHT	TURNS REQUIRED
6′	6.7
6′6″	7.2
7′	7.6
7′6″	8.1
8′	8.5

Figure 42

of turns when winding the spring. A grease pencil, chalk, or spray paint works well. Use two ½" x 18" cold rolled steel winding bars to wind springs the number of turns **(COMPLETE REVOLUTIONS)** specified on the spring tag. If turns are not specified on the spring tag refer to (Fig. 42). **ALWAYS WIND IN THE DIRECTION INDICATED BY THE CUT OFF END OF THE SPRING WIRE**

(Fig. 43). **BE SURE AND COMPLETELY INSERT WINDING BAR IN THE SPRING CONE.** Wind springs carefully, keeping hands as far away from springs as possible for leverage. (Fig. 39) Ensure that the spring is able to stretch as when winding it. Upon completing the number of turns specified, tighten set screws on spring winding cone while maintaining spring tension. Tighten set screws in accordance with the instructions in Step 28.

NOTE: LEAVE THE WARNING TAG ATTACHED TO THE SPRING!

IF SPRING TENSION MUST BE REDUCED OR FULLY UNWOUND

Follow all precautions for winding springs. If there is only one spring on the door, clamp a vise grip on the spring shaft to hold the cable drums in place (Step 28). Insert winding bar in the spring cone and hold tension against the spring. Carefully loosen the set screws and hold the full spring tension. Unwind the spring the desired amount. Reset set screws as required.

STEP 30:

BACK HANG Remove the vise grip from the shaft. While keeping a good hold on the door, (in case the springs are over wound), remove the clamps holding the door down. Raise the door approximately half way up and clamp in position. Fasten back hang material to rear of the horizontal tracks so that the tracks are securely held in place. Ensure that the tracks are level or slightly up and run parallel with the door. (Fig. 44).

NOTE: PUNCHED ANGLE IS AN OPTION FOR BACK HANG WHICH MUST BE ORDERED IN ADDITION TO THE DOOR PACKAGE.

STEP 31:

FINAL ADJUSTMENTS The door should work smoothly and easily throughout its range of operation. Adjust spring tension in ¼ turn increments as required. Ideally the door should be able to rest on the floor, stop half way up, and pull reasonably well down out of the opening.

With door closed, push the lower portion of vertical track towards jamb until door fits lightly against door stop and tighten nuts on jamb brackets.

MIDLAND GARAGE DOOR MFG CO
RESIDENTIAL GARAGE DOOR **OWNERS MANUAL**

Ensure that the rollers run smoothly through the joint of the vertical and horizontal tracks. Use hammer or vise grips to make small adjustments if they are not lined up well.

Check that the door is square in the opening and the tracks are properly aligned.

With the door closed check that the weatherstrip door stop is positioned satisfactorily against the door and nail securely.

Check that all bolts and screws are tight. If necessary lubricate all hinges, bearings, and rollers with lightweight oil. Make sure all the nails holding sections to jambs have been removed.

Check that all the protective film has been removed.

Clean the door as required.

STEP 32:

INSTRUCTIONS AND WARNING LABELS

In the hardware box is an envelope of labels. Place all labels at eye level after installation of door. Post the Owners Manual on the jamb near the door. It has valuable maintenance and warranty information for the homeowner.

STEP 33:

If installing an opener install in accordance with the manufacturers recommended instructions.

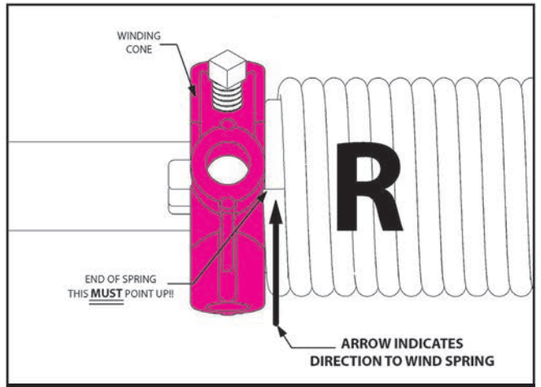

Figure 43

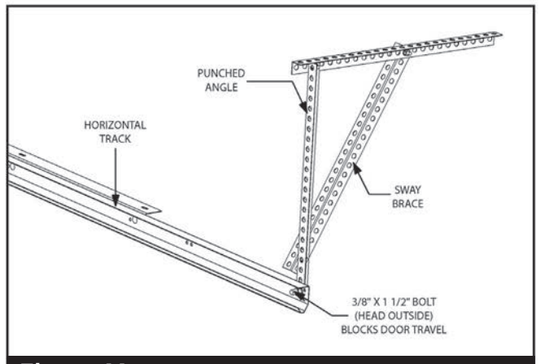

Figure 44

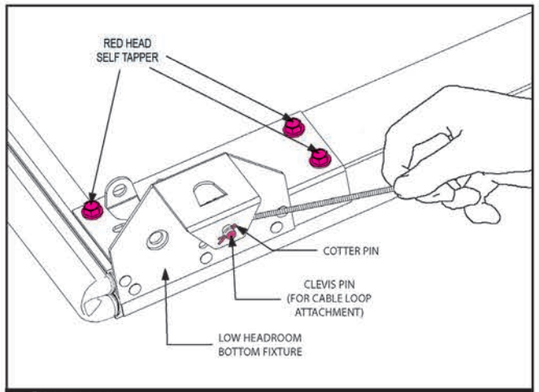

Figure A

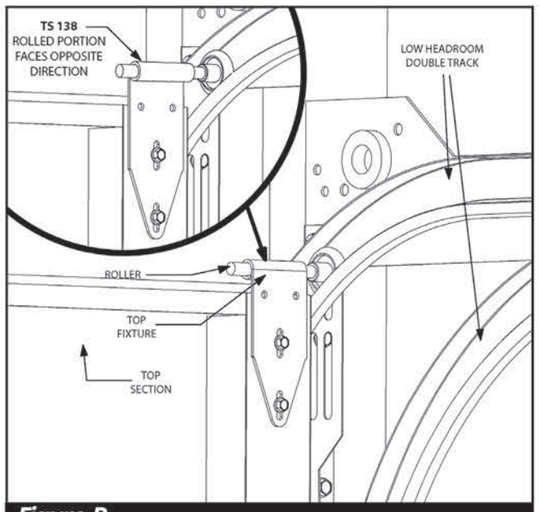

Figure B

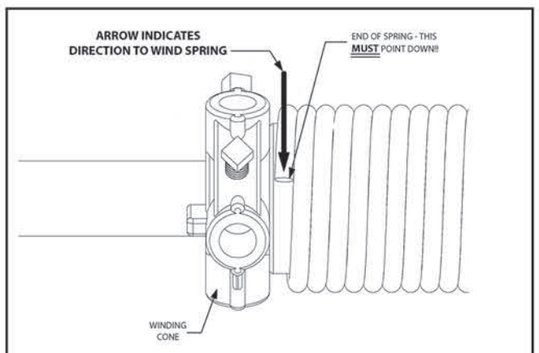

Figure C

INSTALLATION INSTRUCTIONS LOW HEADROOM-TORSION SPRINGS-FRONT

8" MINIMUM HEADROOM

The sequence of installing Low Headroom-Springs Front is the same as outlined in the standard installation instruction with the exception of the following:

BOTTOM FIXTURE [STEP 4]

The Low Headroom Bottom Fixture (Fig. A), is attached to the bottom section. Drill pilot holes with a 3⁄16" bit and fasten to section with ¼" x ¾" RED HEAD self tappers. Fasteners are as shown in the standard instructions.

NOTE: BOTTOM FIXTURES MUST BE LOCATED THE SAME DISTANCE FROM THE TOP OF THE SECTION ON BOTH SIDES.

TOP FIXTURE [STEP 14]

When the top section has been stacked in the opening, insert the roller in the sleeve of the top fixture (Fig. B). Engage the roller in the upper track. **MAKE SURE THE TOP FIXTURE IS ORIENTED AS SHOWN FOR 2" THICK DOORS. ORIENT THE TOP FIXTURE FOR THE THERMOSTEEL 1⅜" DOOR AS SHOWN IN THE INSET.** Locate the Top Fixtures so that the top section is plumb with lower sections. Fasten to the section with ¼" x ¾" self tappers.

MIDLAND GARAGE DOOR MFG CO
RESIDENTIAL GARAGE DOOR **OWNERS MANUAL**

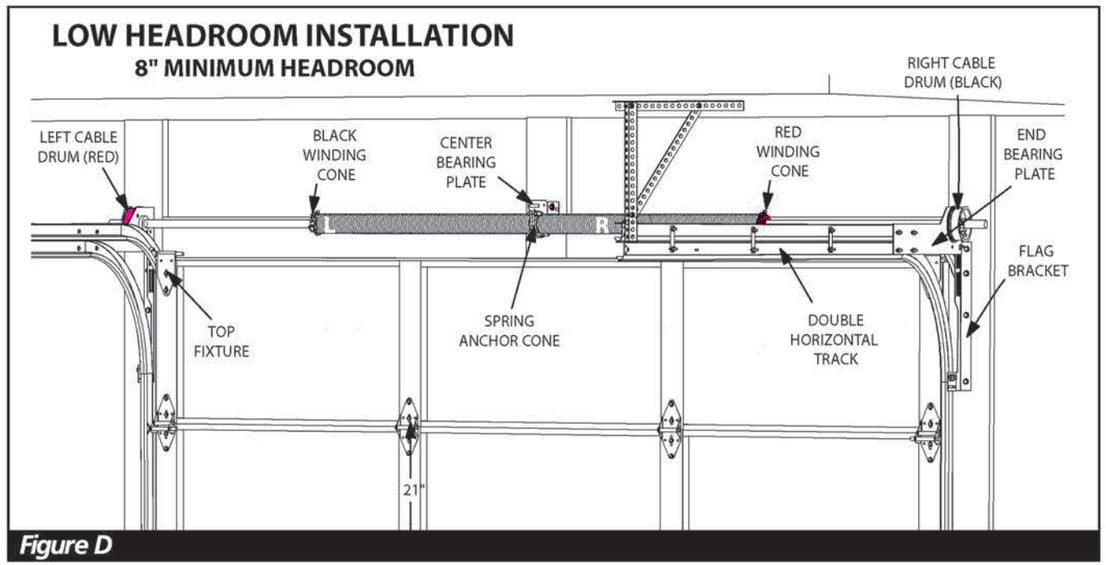

Figure D

SPRING SHAFT ASSEMBLY [STEP 25]

The spring(s) will be mounted **OPPOSITE** of the standard radius track configuration. The spring with the **BLACK CONE** (L Spring), is to the **LEFT** side of door. The spring with the RED CONE (R Spring), to the **RIGHT** side of door. The **RIGHT HAND** cable drum **(BLACK)** will remain on the **RIGHT SIDE** of door, the **LEFT HAND** cable drum (RED) will remain on the **LEFT SIDE** of door. **THE DRUMS WILL BE MOUNTED ON THE** OUTSIDE **OF THE TRACK, AND THE SET SCREWS WILL FACE AWAY FROM THE CENTER OF THE DOOR. REFER TO FIGURES D AND E.**

NOTE: WHEN WINDING LOW HEADROOM TORSION SPRING(S) PULL DOWN ON **THE WINDING BARS! SEE FIGURES C & E**

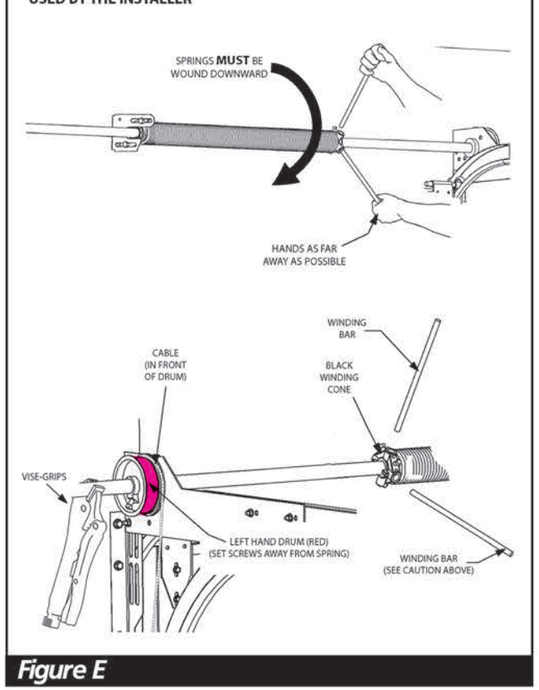

Figure E

MAINTENANCE

CLEANING

From time to time the garage door will require cleaning.

For general accumulations of dust and dirt, wash with a mild detergent and rinse with clear water.

For accumulations causing rusting we recommend the following:

- "Orange Clean" paste cleaner for rust stains
- "Bar Keepers Friend"
- "Turtle Wax" Rubbing Compound (white)
- "Turtle Wax" Chrome Polish and Rust Remover
- "Rusty Exterior" rust stain remover
- "Iron Out" stain remover

If adhesive transfer has occurred from the protective film to the face of the door:

- Very hot soapy water
- Very hot soapy water with denatured alcohol
- Straight denatured alcohol
- "Goo Gone"
- "3M Adhesive Remover"

To restore the luster of the paint:

- "Turtle Wax" Car Wash and Cleaner
- "Turtle Wax" Rubbing Compound
- "Orange Clean" cleaner

CAUTION: SOME OF THESE PRODUCTS ARE AGGRESSIVE. USE CARE NOT TO RUB THROUGH THE PAINT.

INSPECTION

Inspect the garage door once a year. More often if it has high cycles or operates in a harsh environment.
CHECK FOR THE FOLLOWING:

- **Door:** General condition, seals the floor, square in the opening, smooth operation, rope (if installed) not frayed, spring tension-door balances okay
- **Weather strip:** General condition, seals the door
- **Fasteners:** General tightness and security of all fasteners and parts
- **Hinges:** Broken, general wear, loose
- **Rollers:** General wear
- **Cables:** Fraying, attachment to bottom fixture, wrapping properly on the drums
- **Springs:** General condition, mounting hardware all secure, condition of shaft, bearings, drums, and center bearing plate
- **Track:** Bent, loose, alignment
- **Back hang:** Secure
- **Operator:** Check the reversing functions of the operator according to the manufacturers instructions

MIDLAND GARAGE DOOR MFG CO
RESIDENTIAL GARAGE DOOR **OWNERS MANUAL**

LUBRICATION

Use a light weight oil like WD 40 or Three in One Light Oil to lubricate the following:

- **Hinges**
- **Steel rollers:** Roller shaft in the hinge and ball bearings in the roller.
- **Nylon Rollers:** Roller shaft in the hinge and roller shaft where the nylon tire turns. Do **NOT** lube the outside of the nylon tire as that may cause it to slip and create flat spots.
- **Roller Shafts**
- **Bearings**
- **Springs:** Be sure and wipe off any excess oil so it will not drip on the face of the door.
- **Lock T Handle and moving parts**

DO NOT GREASE THE TRACKS

SERVICE

If service is needed:

If not well experienced at working with garage doors please contact the nearest Midland dealer.

Components related to the torsion springs:

- Springs
- Cables
- Drums
- Spring shaft
- End bearing plate
- Bottom fixtures
- Center bearing plate
- Wood spring anchor pad should only be repaired or replaced by a professional door technician.

PAINTING

If repainting the garage door is desired, we recommend:

- Clean the surface thoroughly with Tri-Sodium Phosphate, Soilax, Spic & Span, or a similar product.

  CAUTION: DO NOT USE HARSH SOLVENTS SUCH AS LACQUER THINNERS OR MINERAL SPIRITS. THESE MAY CAUSE PAINT PEELING AFTER THE NEW TOPCOAT IS APPLIED.

- Scrub surface with a brush and sponge. Rinse with clear water and allow to dry.
- If the door has ever been waxed it is imperative that all wax is removed.
- If damage has occurred and the galvanized substrate has been compromised it will be necessary to treat these localized areas with a rust inhibiting primer. See paint store professional for a suitable product.
- Scuff the door surface with a Scotch-Brite pad. Clean the door again as required.
- Top coat with a quality acrylic latex exterior paint. Apply per manufacturers instructions.

Be aware that re-painting the door does affects the warranty. See the warranty for details.

INSTITUTE OF DOOR DEALER EDUCATION AND ACCREDITATION
Proud Supporter of IDEA Certification Services
dooreducation.com

LIMITED WARRANTY

This warranty applies to doors purchased after April 1, 2026. Midland warrants its products to be free from defects in materials and workmanship as follows:

RESIDENTIAL

THERMOGUARD™, THERMOSTEEL™, SERIES 24
Midland warrants these steel garage door sections against rust through, paint finish cracking or peeling to the original purchaser for as long as they own the building in which the doors were installed.

All other components except springs are warranted for 5 years.

OVERLAY, CHALET
Midland warrants Overlay door sections against rust through, paint finish cracking or peeling to the original purchaser for as long as they own the building in which the doors were installed.

Midland warrants Chalet door sections against rust through, paint finish cracking or peeling to the original purchaser for 5 years.

Midland warrants the Overlay & Chalet Boards against pulling off from the sections to the original purchaser for 5 years.

Midland warrants the Overlay Boards against rot, buckling and surface defects to the original purchaser for 10 years.

Midland warrants the Chalet Boards against rot, buckling and surface defects to the original purchaser for 5 years.

All other components except springs are warranted for 5 years.

FULLVIEW, ATHENA
Midland warrants these aluminum garage door sections against rust through, paint finish cracking or peeling to the original purchaser for 5 years.

All other components except springs are warranted for 5 years.

TS-138, VALUCRAFT PLUS, SERIES 26, PINNACLE
Midland warrants these steel garage door sections against rust through, paint finish cracking or peeling to the original purchaser for 25 years.

All other components except springs are warranted for 2 years.

COMMERCIAL

2" & 3" THERMOGUARD™, 2" & 3" ENERGYSAVER™, CS20 & CS24
Midland warrants these steel garage door sections against rust through, paint finish cracking or peeling to the original purchaser for 10 years.

All other components except springs are warranted for 2 years.

Midland warrants components in a high cycle application for 1 year.

GENERAL

Midland warrants the 3" EnergySaver™ sections used in harsh environments to the original purchaser for 1 year. No other section models are warranted when used in a harsh environment application.

Midland warrants the harsh environment component package for 1 year.

Midland warrants springs in all applications for 1 year to the original purchaser.

Midland warrants all its ThermoSteel™, EnergySaver™ and ThermoGuard™ sections against delamination for a period of 10 years to the original purchaser.

COLORSELECT™, POWDERCOAT
Midland's ColorSelect™ shall be warranted against cracking, blistering, flaking or peeling to the original purchaser for a period of 5 years under normal use.

Midland warrants to the original purchaser against aggressive color fade which alters the color of the product more than 5 Delta E units (as measured on a cleaned surface and measured per ASTM D2244) for a period of 5 years.

Midland PowderCoat finishing is warrantied for 3 years from any cracking, peeling, or blistering.

WARRANTY EXCLUSIONS

1. Deterioration due to rust resulting from damage to the garage door section caused by fire, other accident or casualty, vandalism, harmful fumes or chemicals, condensation or occurring as a result of any physical damage.
2. Section exposure to extreme environments (high salt atmosphere, corrosive chemical, cement dust, animal waste, sandstorms, water runoff).
3. Failure of paint if any top coatings are applied to factory paint.
4. Onsite labor.
5. Freight charges.
6. Scratches or dents occurring after pick up or delivery from Midland.
7. Damage caused by improper installation, maintenance or product alteration.
8. Damage caused by misuse, abuse or accident.
9. Delamination as a result of a heat source too close to the garage door sections (eg heaters, lights, etc.)
10. Wear from normal operation. Failure to properly maintain the garage door and its hardware through regular maintenance
11. The warranty of the manufacturer shall be limited to the repair or replacement only for such parts which may be acknowledged by the manufacturer to be defective.

To make a claim under this warranty contact your Midland dealer. A written claim accompanied by proof of purchase must be submitted within 30 days of discovery of the suspected defect. Midland may at its discretion send a representative to inspect the defective part and/or may request that the defective part be returned to the factory freight pre paid.

No warranty extends to consequential or incidental damages. All other express or implied warranties including any implied warranty of merchantability or implied warranty of fitness for purpose are hereby expressly excluded.

PRODUCT DISCLAIMERS

MODULAR DOOR (STEEL & ALUMINUM PINNACLE)
Due to the unique construction and panel design of modular garage doors, minor water intrusion may occur under certain environmental or installation conditions. This is a normal characteristic of modular style doors and does not indicate a defect in materials or workmanship. Proper installation, weather sealing, and maintenance can help minimize water penetration; however, complete water tightness cannot be guaranteed.

NOTES:

NOTES:

MIDLAND GARAGE DOOR MFG CO
RESIDENTIAL GARAGE DOOR **OWNERS MANUAL**

NOTES:

NOTES:

MIDLAND GARAGE DOOR MFG CO
RESIDENTIAL GARAGE DOOR **OWNERS MANUAL**

NOTES:

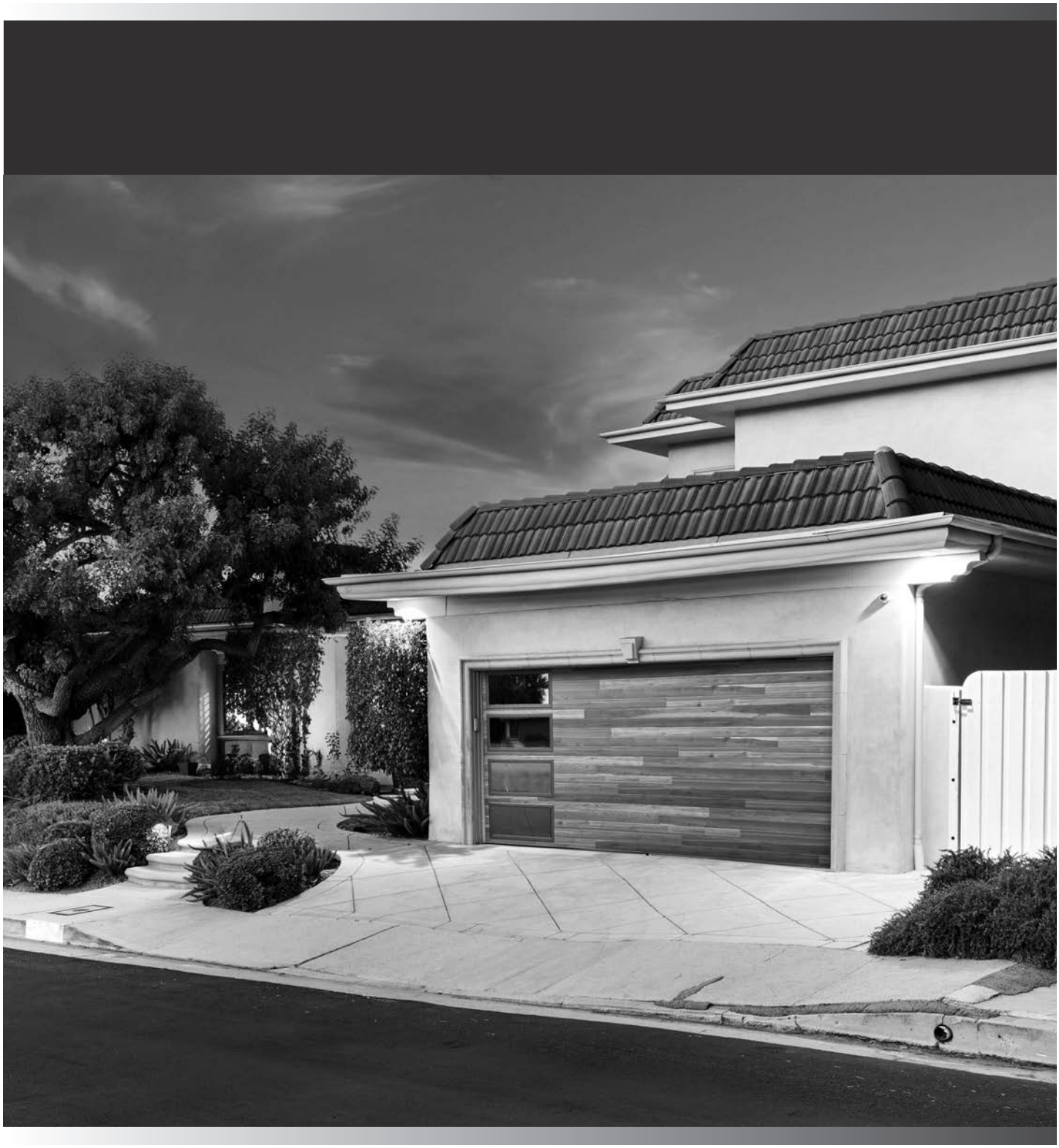

MIDLAND™
GARAGE DOOR MFG CO

midlandgaragedoor.com