OWNERS MANUAL

INSTALLATION & MAINTENANCE INSTRUCTIONS



INSTALLED BY:

DATE:

MIDLAND™
GARAGE DOOR MFG CO

COMMERCIAL GARAGE DOORS

09-26

TABLE OF CONTENTS

SAFETY INFORMATION ..... Page 2
Before you begin ..... Page 3
Tools required ..... Page 3
Hardware components ..... Page 4
Step by step installation instructions ..... Page 5

SPECIAL APPLICATION INSTRUCTIONS:

- Standard Radius track instructions ..... Page 14
- High Lift track instructions ..... Page 15
- Full Vertical Track instructions ..... Page 16
- Roof Pitch ..... Page 16
- Low Headroom Springs Front/Rear instructions ..... Page 18 & 26

Maintenance ..... Page 30
Warranty ..... Page 32

IMPORTANT SAFETY INFORMATION

Springs, cables, and bottom fixtures are under extreme spring tension. **NEVER ATTEMPT TO REMOVE FASTENERS ON THESE COMPONENTS UNLESS THE SPRINGS ARE COMPLETELY UNWOUND**.

NOTE - All fasteners that are colored in **RED** are under extreme tension and must never be removed unless the springs are unwound and all spring tension is released.

CAUTION - Due to the extreme spring tension, never wind or unwind without the proper winding bars. Cold rolled steel bars 18” to 22” that properly fit the winding cone holes are recommended.

Keep hands and fingers clear of section joints, track, and other door parts when operating the door. The lift handle, step plate, and pull rope are provided for the safe operation of the door.

CAUTION- ACQ GREEN TREATED LUMBER will corrode zinc and galvanized coated fasteners and components. Use fasteners appropriate for ACQ lumber. Protect door components as required.

Do not permit children to play underneath or with any garage door operating controls.

Always have the door in view to ensure its travel is free and clear before operating the electric garage door opener.

MIDLAND GARAGE DOOR MFG CO
COMMERCIAL GARAGE DOOR **OWNERS MANUAL**

BEFORE YOU BEGIN: PLEASE READ THIS

- Take heed of the **NOTES** and **CAUTIONS** in this book. They will save you from having to redo your work.
- Study the installation instructions and illustrations before you begin work to understand what the various components are and the sequence of assembly.
- Note that the **RED FASTENERS** are used on all components that are under spring tension. This serves as a **WARNING** that serious harm could occur if the fastener is removed while under spring tension.
- Verify your type of door and track so you can refer to the proper illustrations and sections of this manual.
- It is recommended to pre drill 1/4” holes for **ALL** 5/16” x 1 5/8” wood lags...**ESPECIALLY THE CENTER BEARING PLATE** that attaches the spring(s) to the wall. This prevents the wood from splitting out and gives the most secure attachment.
- If applicable remove the **PROTECTIVE FILM** from the sections upon installation. If the film is allowed to get wet the adhesive may transfer from the film to the section.
- If only one section has a **CENTER STILE** use it for the top section. It’s for draw bar operator attachment.

TOOLS REQUIRED

- HAMMER
- SCREWDRIVERS
- SOCKET SET, 3/8” TO 9/16”
- WRENCH SET
- VISE GRIPS
- TAPE MEASURE
- PLIERS
- DRILL
- HACKSAW
- ELECTRIC IMPACT OR SCREW GUN
- SAWHORSES
- ROPE
- LADDERS, SCAFFOLD, OR LIFT
- C-CLAMP
- LEVEL
- DRILL BITS: 1/4”, 5/16”, 3/8”, 7/16”
- EXTENSION CORD
- TWO WINDING BARS, 18” TO 22”

HARDWARE COMPONENTS

⅜ x ⅞ Carriage Bolt	Clevis Pin	Truss Sag Brace
5⁄16 x 1¾ Wood Lag	Hinge #1	Vertical Track (1 Pair)
¼ x ⅞ Self Tapper	Hinges #2 #3 #4	Horizontal Track (1 Pair)
¼ x ¾ Self Tapper	Bottom Fixture	Jamb Bracket
¼ x ⅝ Track Bolt	Low Head Room Bottom Fixture	End Bearing Plate
¼ Carriage Bolt	Top Fixture	Center Bearing Plate
¼ x ⅝ Carriage Bolt	Low Head Room Top Fixture	Bearing
¼ Flange Nut	Roller Carrier	Shaft Coupler
⅜ x 1½ Bolt	Collier Roller Carrier	Cable Drum
⅜ Flange Nut	Roller	4 Hole Pillow Block Bearing
5⁄16 x 1¾ Red Head Wood Lag	Rope	Spring Shaft
5⁄16 x ⅝ Red Head Parker	Rope Clip	Torsion Spring
⅜ Red Flange Nut	Lift Handle	Spring Bumper
5⁄16 x 1 Self Tapper	Step Plate	Slide Lock
Cotter Pin	Cable Assembly	Vinyl Weather Strip
¼ Square Key	Strut	
	Z-Truss	

MIDLAND GARAGE DOOR MFG CO
COMMERCIAL GARAGE DOOR **OWNERS MANUAL**

STEP 1:

PREPARE OPENING

Check that the opening is ready. For wood jambs check that the rough opening equals the door size. The jamb should be a substantial high quality 2x6 type material. For steel jambs the door will be 2” wider than the opening. The door will seal on the vertical track angle mount. Check that you have the required headroom, side room, and back room (Fig. 1). The jambs need to be plumb and the header level to have a square opening. The vertical jambs and the “header jamb” should be flush with each other. The inside surfaces of the jambs where the door will mount should be free of any protruding objects (nails, bolts, screws) that may interfere with the door.

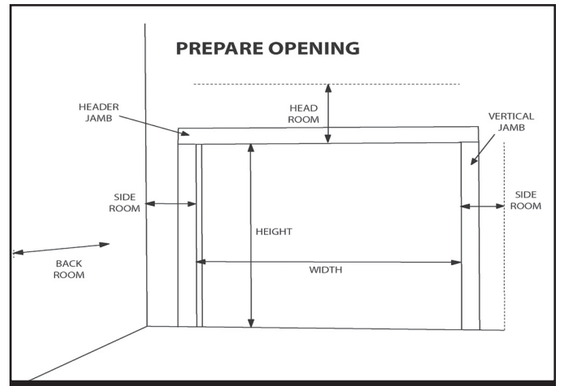

Figure 1

CAUTION!

NEVER INSTALL DOOR COMPONENTS DIRECTLY ON A SOFT SURFACE LIKE SHEETROCK OR BUFFALO BOARD!

STEP 2:

WEATHER STRIP

WOOD JAMBS: Tack the Vinyl Door Stop in place with the flat edge placed 1/8” from the inside edge of the door jambs and header (Fig 2). Six or seven penny galvanized nails work well.

NOTE:

• IF YOU WILL BE USING ANGLE MOUNT WEATHER STRIP OR ALUMINUM VINYL PERIMETER SEAL FOR STEEL JAMBS, THESE WILL BE APPLIED LATER.

• DOOR STOP IS AN OPTION WHICH MUST BE ORDERED IN ADDITION TO THE DOOR PACKAGE.

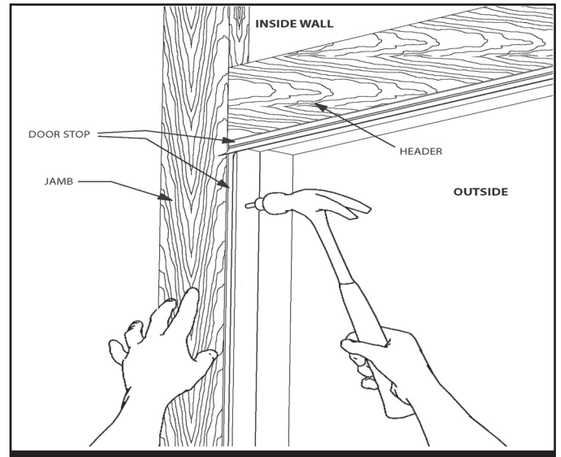

Figure 2

STEP 3:

ORGANIZE

Set your sawhorses up in a clear convenient area. Be sure there is nothing on the sawhorses that will dent or mar the paint of the sections. Spread the hardware out on the floor near the sawhorses.

Organize it into groups so you can easily find the parts as you go. Organize the fasteners in the hardware box in the same manner.

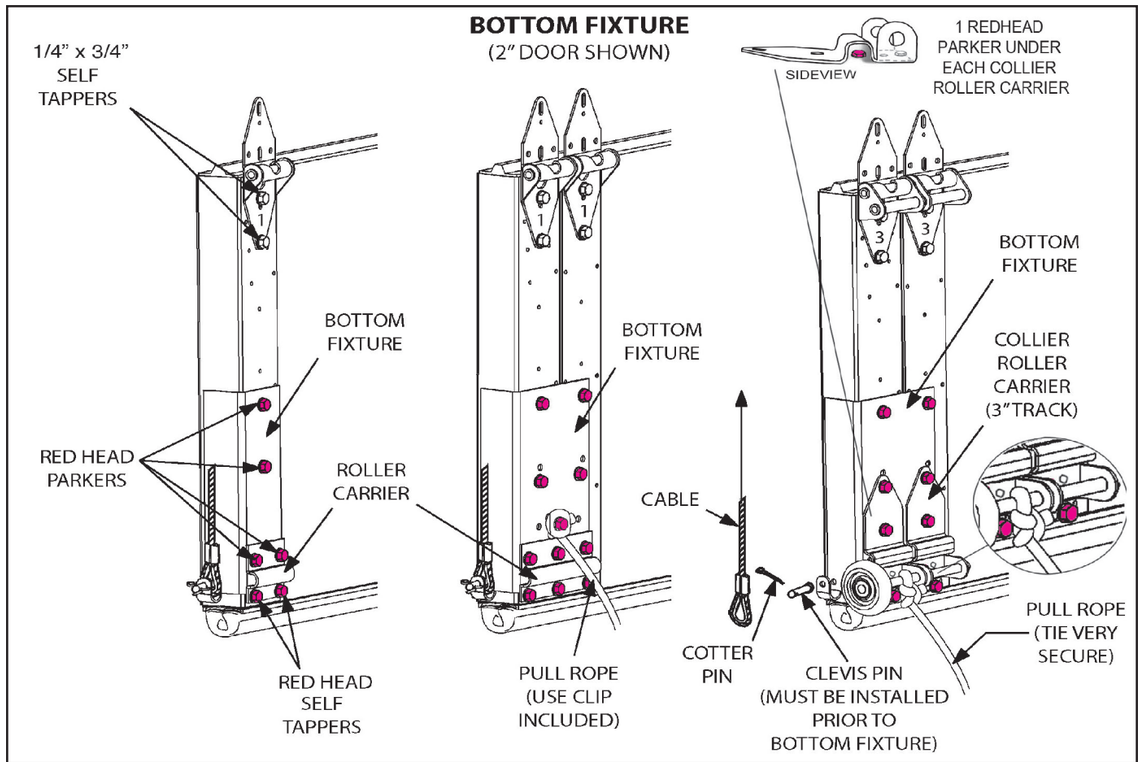

Figure 3

STEP 4:
BOTTOM SECTION ATTACHING PARTS:

Lay bottom section across sawhorses.

NOTE: FOR LOW HEADROOM APPLICATIONS REFER TO PAGE 26. FOR ALL OTHER APPLICATIONS USE THE FOLLOWING INSTRUCTIONS.

BOTTOM FIXTURES: (Fig. 3). If the left and right bottom fixtures are attached together, bend them back and forth at the joining tabs until they separate. Attach cable to right and left hand bottom fixtures with 1/4" clevis pin and cotter key. Position bottom fixtures along bottom edge of end stiles and fasten with 5/16" x 5/8" **RED HEAD** parkers, leaving the bottom holes open for installation of roller carrier. Place the bottom fixture roller carriers in position and fasten with 5/16" x 5/8" **RED HEAD** parkers in the upper holes. Use **RED HEAD** self tappers in the lower holes (Fig. 3).

END HINGES: Refer to (Fig. 4) to determine the proper number hinge to start with. Position the hinge over the pre-punched holes on the end stile at the top of the section. Orient hinges as shown in (Fig. 5). Fasten hinges with 1/4" x 3/4" self tappers.

INTERMEDIATE HINGES: Position a #1 hinge over the pre-punched holes at the top of the section on each intermediate stile. ThermoGuard models use Tog-L-Lock marks to determine hinge position. **(SEE FIGURE 5 FOR PROPER ORIENTATION OF HINGES.)** Fasten hinges with 1/4" x 3/4" self tappers.

MIDLAND GARAGE DOOR MFG CO
COMMERCIAL GARAGE DOOR **OWNERS MANUAL**

STEP 5:
BOTTOM SECTION STEP PLATE:

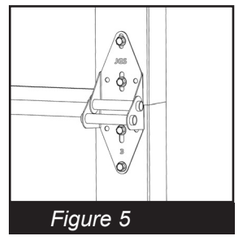

Figure 5

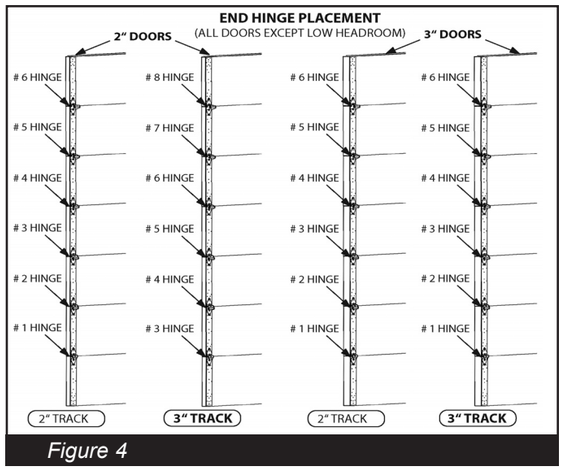

Figure 4

Follow the appropriate instructions below depending on your type of lock:

KEYED LOCK- Two step plates are provided in the hardware box. One is for the inside and one for the outside of the door. The carriage bolts and tube spacers are located in the keyed lock package. The step plates should be attached to the stile directly under the lock and positioned at the bottom edge of the bottom section.

Using the step plate as a template, drill two 7/16" holes using care to drill straight and true. The other end of the hole you drill will locate the step plate on the outside of the door. Insert the spacers. Fasten step plates to inside and outside of section using the two 1/4" carriage bolts and kep nuts provided.

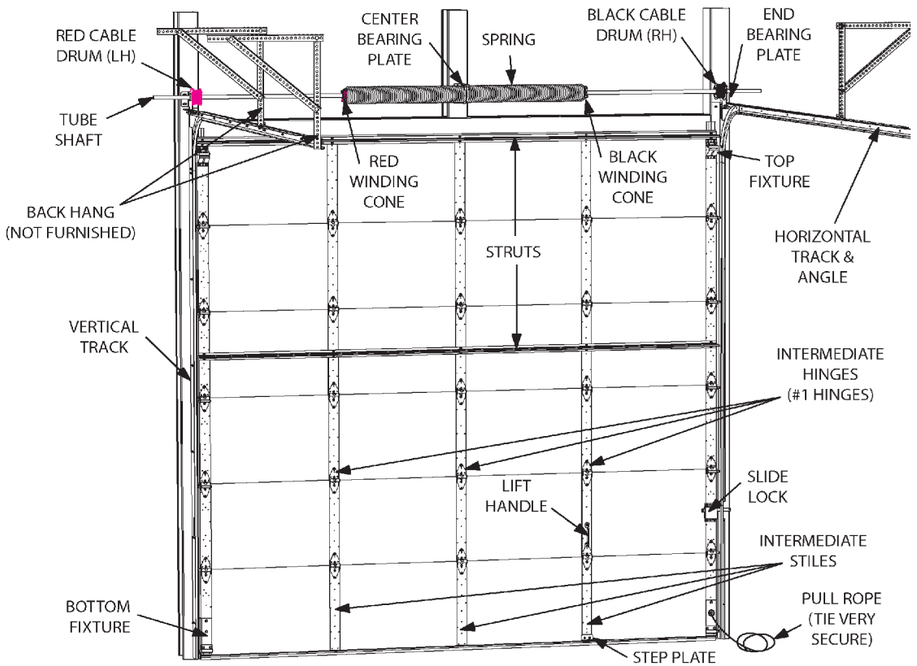

Figure 6

CAUTION:
DO NOT OVERTIGHTEN BOLTS ON STEP PLATE

INSIDE SLIDE LOCK- You received one step plate for the inside of your door. Location of the step plate varies according to preference. Generally it is put on the end of the door nearest the walk-in access, either on the first stile in from the end of the door or on the bottom fixture directly above bottom roller. Attach using 1/4" x 7/8" self tappers (Fig. 6).

STEP 6:
PULL ROPE

Install pull rope only if door will be hand operated. **DO NOT INSTALL THE PULL ROPE IF THE DOOR WILL BE OPERATED BY AN ELECTRIC OPENER.** Tie a knot in each end of rope. Drill a 1/4" hole in the bottom fixture as close to the bottom roller as possible making sure to leave room for the rope clip. Fasten rope to bottom fixture using rope clip and 5/16" x 5/8" **RED HEAD** parker (Fig. 3). Let opposite end of rope hang loose.

STEP 7:
STRUTS

Use the charts on the next page to determine what sections to put the struts and trusses on for your door. These charts give the typical locations for 2" Steel Doors and the 3" Energy Saver doors.

GENERAL GUIDELINES:
Top sections need the most support. If you have a combination of trusses and struts a truss will always go on the top section. If you have a combination of 3" and 2" struts the 3" strut will always go on the top section. If there is only one strut for the door locate it on the top section.

STRUT LOCATION ON THE SECTIONS

On **BOTTOM** and **INTERMEDIATE SECTIONS:**
For all C2ES, C3ES, Ribbed, and ThermoGuard models, place the struts and trusses in center of the section (For window sections, place strut above the window and below the hinges) (Fig. 7a).

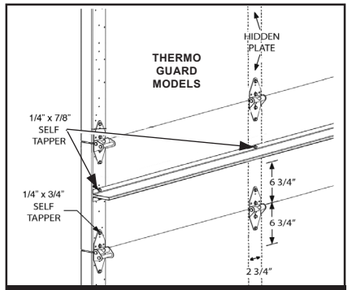

Figure 7a

For all Thermal Steel models (Fig. 7), strut attachment points must be in the area of the hidden hinge plates.

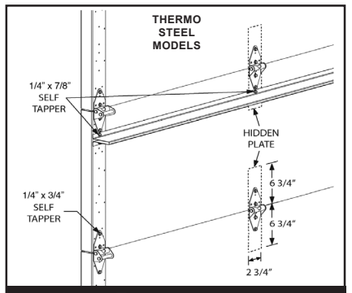

Figure 7

On TOP SECTIONS:
For all door models, place the strut at the very top of the section, above the top fixtures. The exception to this would be a door with LHR track (Fig. 45). If a truss is required, place the truss in center of the section, below where the operator arm would attach.

INSTALL THE STRUT: To install a strut on a section, place the section on saw horses and place the strut in position on the section. Adjust the sawhorses in or out so the section sags 1/2" or so under the strut (Fig. 8 & 9). First, fasten strut to end stiles on both ends with 1/4" x 7/8" self tappers. Then fasten strut to center stile with 1/4" x 7/8" self tappers. Finally, fasten strut to any remaining intermediate stiles.

NOTE: PREPUNCHED HOLES IN STRUTS DO NOT ALWAYS ALIGN WITH THE STILES.

MIDLAND GARAGE DOOR MFG CO
COMMERCIAL GARAGE DOOR **OWNERS MANUAL**

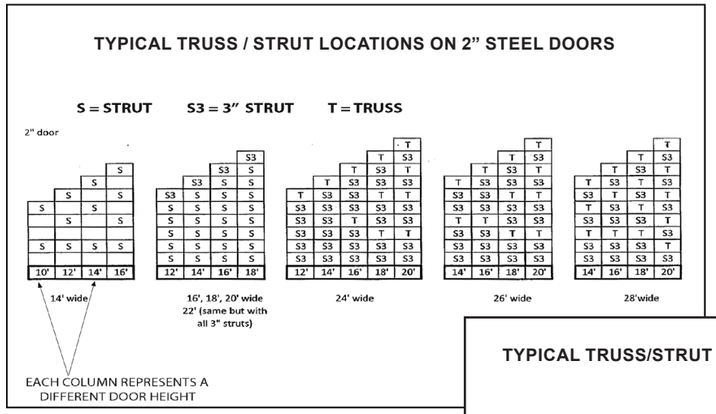

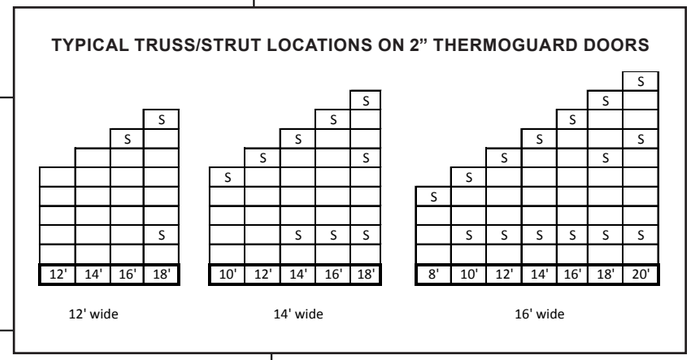

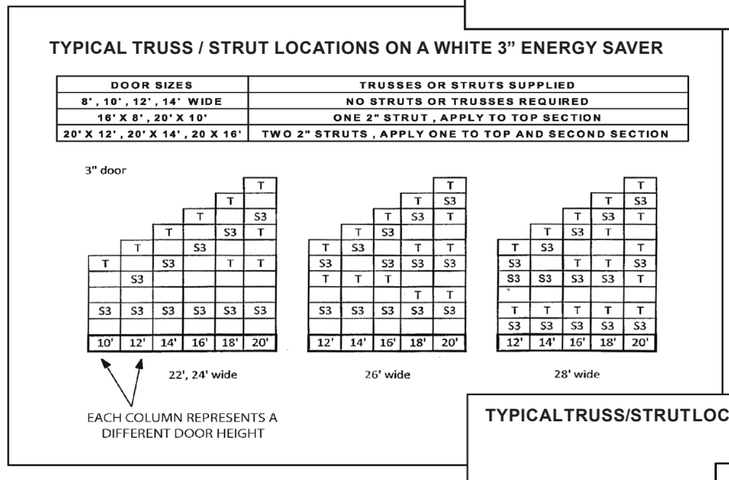

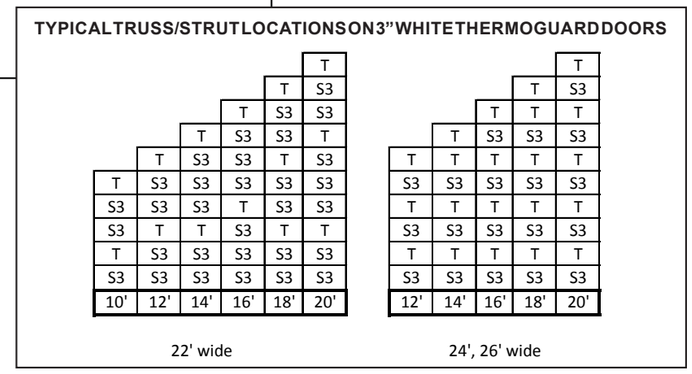

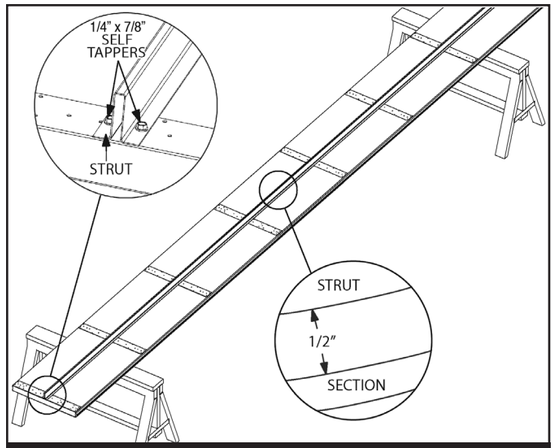

Figure 8

STEP 8:
BOTTOM SECTION

REMOVE THE PROTECTIVE FILM FROM THE OUTSIDE FACE OF THE SECTION. To aid removal use a knife to LIGHTLY scribe a line where the film runs under the end stiles and the aluminum bottom astragal retainer.

Install the hinges, rollers, and bottom fixtures (Fig 10).

NOTE: IF YOU HAVE TWO ROLLERS THAT ARE LONGER THAN ALL THE REST THEY WILL GO IN THE BOTTOM FIXTURES.

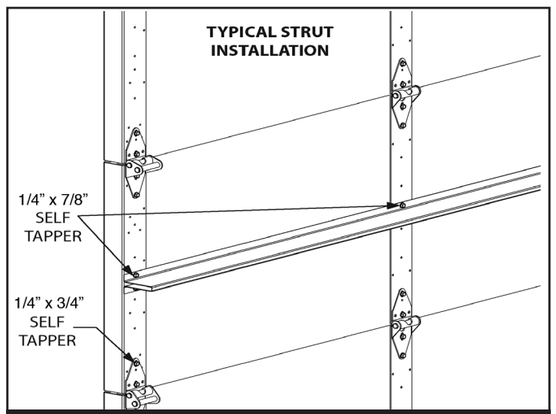

Figure 9

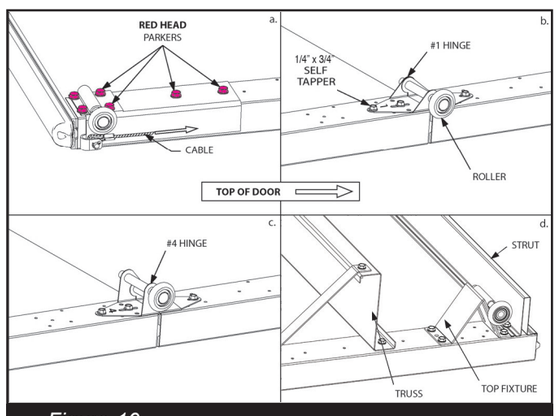

Figure 10

STEP 9:
INSTALL THE BOTTOM SECTION AND VERTICAL TRACK

Determine your type of track and jamb and follow the appropriate instructions below:

PREP THE ANGLE MOUNT VERTICALS: Loosen the 1/4" track bolts that fasten the track to the angle mount (or jamb brackets) so the track can be adjusted in and out. If using **ANGLE MOUNT WEATHERSTRIP,** clip it on the 3" leg of the angle mount at this time (Fig. 11).

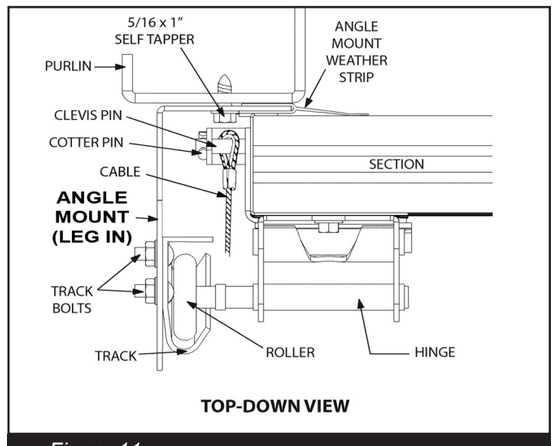

Figure 11

MIDLAND GARAGE DOOR MFG CO
COMMERCIAL GARAGE DOOR **OWNERS MANUAL**

PREP THE JAMB BRACKET MOUNT VERTICALS: Assemble the jamb brackets to the vertical tracks, matching the lowest numbered jamb bracket with lowest **ADJUSTABLE SLOT**. Match the remaining jamb brackets in ascending order with additional **ADJUSTABLE SLOTS** (Fig. 12). Attach the jamb brackets to vertical tracks with 1/4" x 5/8" carriage bolts and 1/4" kep nuts. **FINGER TIGHTEN ONLY**.

ALL DOORS:
Position the bottom section inside the opening against the jambs. **The bottom section must be leveled** by temporarily shimming up the low side. Use a 2' or 4' level. Center the section in the opening (Fig. 13).

Hook vertical track over the rollers on the end of the bottom section and swing it into place against the jamb (Fig. 14). Position bottom of track 1/2" or so above floor (It works well to set the track on a block of wood to hold it at the proper height.). Raising the tracks allows adjustment in and out and will reduce corrosion. Position vertical track so that the tops of both sides are level with the other. Since the bottom section is level, you may level the top of the vertical track by measuring from the top of the vertical track to the top of the bottom section and setting both vertical tracks at the same distance.

Also, the two vertical tracks will be installed in a "wedge" shape compared to the door. For **2" TRACK,** space the bottoms of the tracks 3/8" from the door and space the tops of the tracks 5/8" from the door.

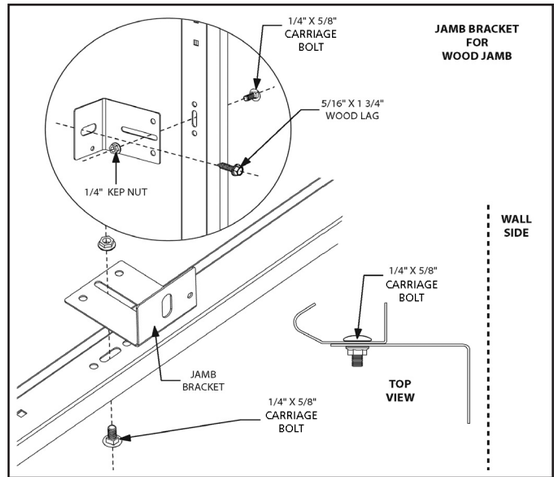

Figure 12

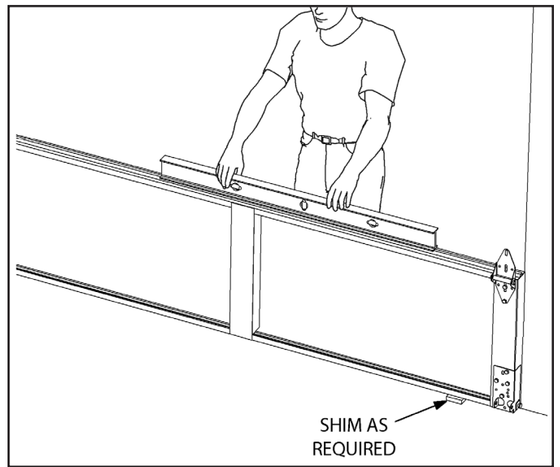

Figure 13

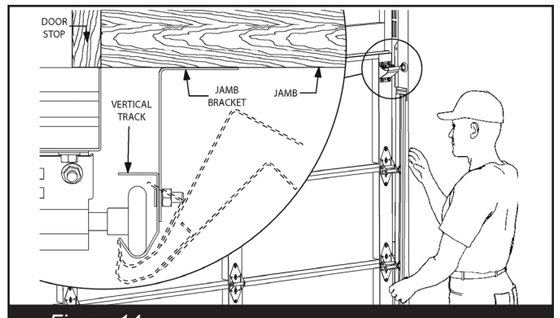

Figure 14

This has the effect of centering the door every time it goes up and down. If you are using 3" **TRACK** this spacing should be 1/2" and 7/8" respectively (Fig. 15).

Fasten the angle mount (or jamb brackets) to the jamb with the appropriate fasteners. For **STEEL JAMBS** use 5/16" X 1" self tappers (Fig. 11). For **WOOD JAMBS** (Fig. 14 shows a final assembly), make a 1/4" pilot hole and use 5/16" x 1 3/4" wood lags.

NOTE: Enough fasteners are provided to anchor the angle mount to the jamb approximately every 2'. Start at the lower most hole and work up from there. There may be holes that are unused.

STEP 10:
SECTION PLACEMENT

If your new door has a combination of 18" and 21" or 21" and 24" sections, you must decide which sections will be placed where in the door. If your door has only one larger section, the factory will make it into a bottom section. If there are two larger sections, one will be the bottom and the other should be the top. After this, as a general rule ,place the larger sections toward the bottom and the smaller sections toward the top.

NOTE: If there is a "TOP SECTION" with a center stile (for a drawbar operator), ensure that it is used at the top of the door.

STEP 11:
SECOND SECTION PREP

Remove the film from the section. Position the proper hinges at the top of the section in the same manner as with the bottom section. Use the next size larger hinges on the end stiles and #1 hinges on the intermediate stiles as required (Fig. 4). Fasten hinges with 1/4" x 3/4" self tappers.

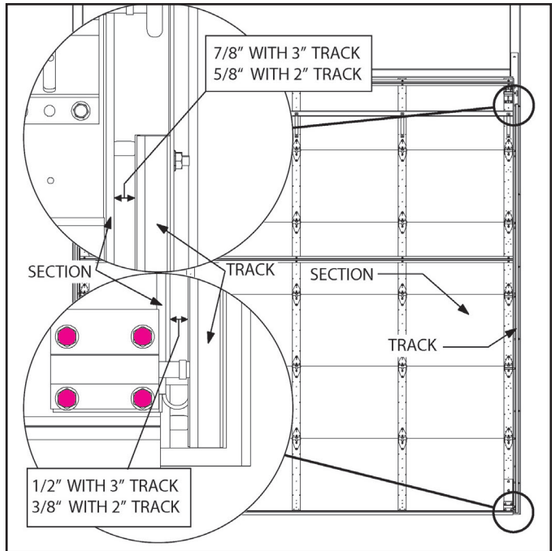

Figure 15

NOTE: LEAVE THE HINGE / ROLLER OFF THE RIGHT SIDE. THEY WILL BE INSTALLED AFTER THE SECTION IS STACKED IN THE OPENING.

Install the strut as required. If a keyed lock is utilized install it in the second section using the instructions in the commercial keyed lock package.

STEP 12:
STACK SECOND SECTION

Stack the second section in the opening. Hook the roller on the left side of the section into the track and swing the section into the opening (Fig. 16). Install the right hand hinge/roller assembly.

NOTE: If desired you can leave all the end hinges off, stack the section in the opening and then install both sets of end hinges with rollers.

Fig. 17 shows a method of clamping the section in place with a vise grip until the end hinges are installed. Fasten hinges from the bottom section to the second section using the 1/4" x 3/4" self tappers.

MIDLAND GARAGE DOOR MFG CO
COMMERCIAL GARAGE DOOR **OWNERS MANUAL**

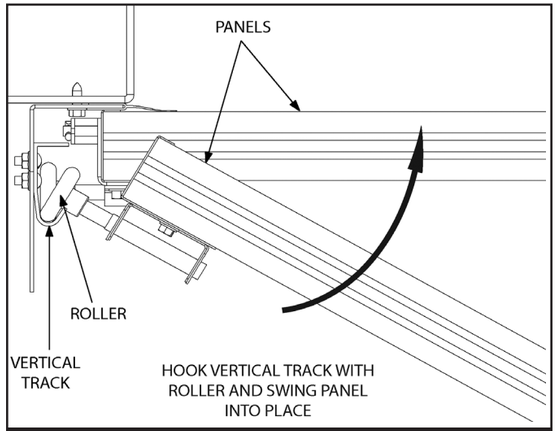

Figure 16

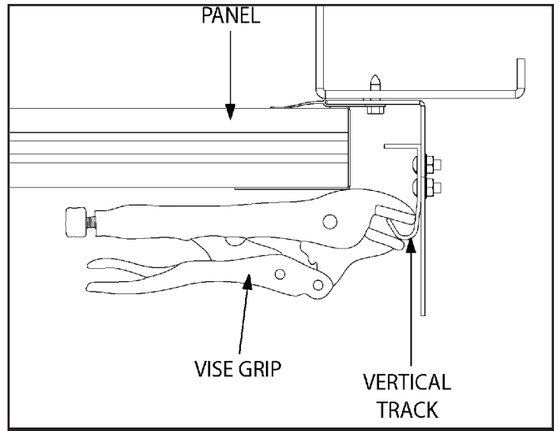

Figure 17

STEP 13:
REMAINING SECTIONS

Add appropriate hardware and install the remaining sections. If there is a window section ensure it will go in the proper place. **REMOVE THE PROTECTIVE FILM FROM ALL SECTIONS**

STEP 14:
TOP SECTION PREP

FOR LOW HEADROOM APPLICATIONS REFER TO PAGES 26-29

If a strut is required, place the strut at the very top of the section and fasten according to instructions in step 7 (Fig. 18). Position the top fixture directly below the strut with the adjusting bolts facing up. Attach to the section with 1/4" x 7/8" self tappers. Loosen the two 5/16" nuts on each top fixture so that the roller carrier can slide in and out for later adjustment. **IF YOUR DOOR HAS NO TOP STRUT, PLACE THE TOP FIXTURES 2 1/2" BELOW THE TOP OF THE SECTION.**

STACKING THE TOP SECTION: You can either: 1) Stack the top section now and hold it in place with nails, clamps, C clamps, or vise grips, as required or 2) Wait to stack the top section until the horizontal tracks are installed.

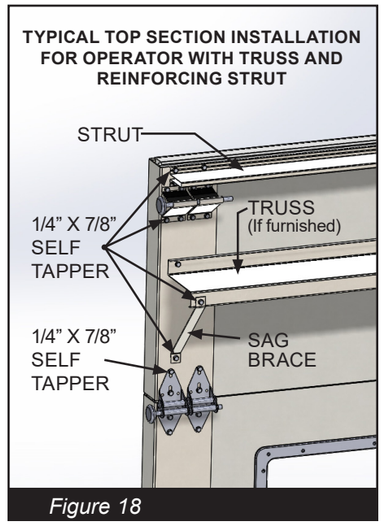

Figure 18

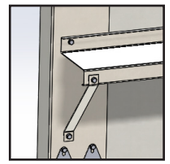

THE CORRECT WAY TO INSTALL THE Z-TRUSS & SAG BRACE

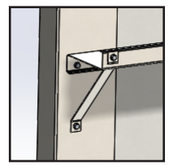

THE WRONG WAY

NOTE: IF AN ELECTRIC DRAWBAR OPENER IS TO BE ATTACHED TO THIS DOOR, THE TOP SECTION MUST BE REINFORCED WITH A STRUT AND THE OPERATOR ARM MUST BE ATTACHED SO THAT IT IS APPROXIMATELY IN LINE WITH THE TOP ROLLERS. IF THESE INSTRUCTIONS ARE NOT FOLLOWED THE WARRANTY WILL BE INVALID.

STEP 15:
SET VERTICAL TRACK
Snug the top of the vertical track toward the jamb against the highest roller. Tighten the track bolts in the flag bracket/angle mount to hold it in position. This enables you to properly locate the horizontal track for the next step. Do not tighten the other track bolts on the vertical at this time. That will be done later.

STEP 16:
INSTALL TOP TRACKS
It is now time to install the top tracks. Turn to the appropriate section for your application within step 16 and follow the instructions there.

STANDARD RADIUS
(Fig. 6 shows a typical installation.)
HORIZONTAL TRACK:
Suspend the rear of the horizontal track assembly from the ceiling with rope (Fig. 19). Position the front of the horizontal track on top of the vertical track and attach using the 1/4" x 5/8" track bolts and 1/4 keps nuts and the 3/8" x 3/4" carriage bolt and **RED** flange nut (Fig. 20).

Only finger tighten the bolts at this time.

Check that the horizontal track is level or slightly up. With the horizontal and vertical tracks properly aligned (so the rollers will roll through the joint smoothly), tighten the bolts to secure the horizontal track in place.

TOP FIXTURE: Slide adjustable bracket on top fixtures (Fig. 20) away from door until the top section is tight against the door-stop and tighten the adjusting bolts.

END BEARING PLATE: Attach the End Bearing Plates as shown in (Fig. 20). Use the 3/8" x 3/4" carriage bolts and **RED** flange nuts and **RED HEAD** parkers or **RED HEAD** wood lags as required.

Now go to step 17.

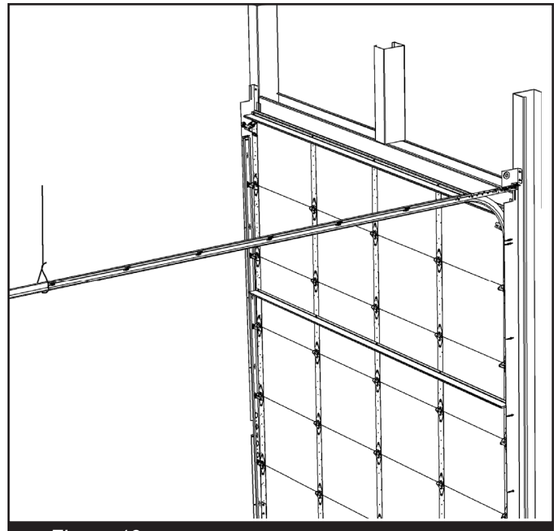

Figure 19

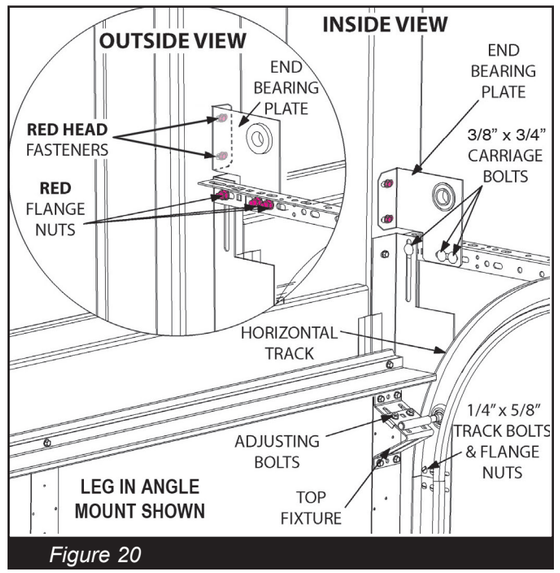

Figure 20

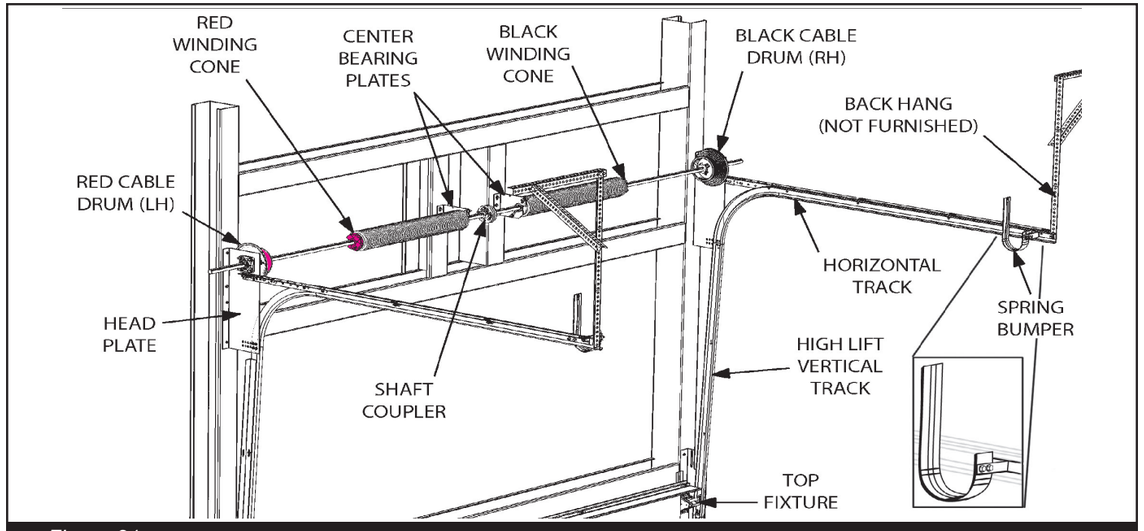

Figure 21

HIGH LIFT
(Fig. 21 shows typical installation.)
HORIZONTAL TRACK:
Locate the left hand "**HIGH LIFT VERTICAL TRACK**". Attach it to the top of the verticals with two 1/4" x 5/8" track bolts and 1/4" keps nuts (Fig. 22). Attach the left hand **HORIZONTAL TRACK** with the head plate to the top of the high lift vertical track just installed, with two 1/4" x 5/8" track bolts and 1/4" keps nuts. Use a level to plumb it in place so the **HIGH LIFT VERTICAL TRACK** is exactly vertical. Secure the head plate to the jamb with appropriate **RED HEAD** fasteners (Fig. 23).

Use a temporary rope if/as required to support the rear of the horizontal tracks during this process.

Install the right hand track in the same manner. Instead of using a level to plumb the right hand track, measure the distance between the vertical tracks at the top of the door. Then locate the right hand head plate to achieve the same distance between the upper tracks. Fig. 24 shows how to measure this as "Distance 1" and "Distance 2". Anchor the right hand head plate with the appropriate **RED HEAD** fasteners.

Ensure there is a good fit between all the track joints so the rollers can pass smoothly.

TOP FIXTURE: Slide adjustable bracket on top fixtures (Fig. 22) away from door until the top section is tight against the door stop and tighten the adjusting bolts.

The back hang and spring bumpers will be installed later. Now go to step 17.

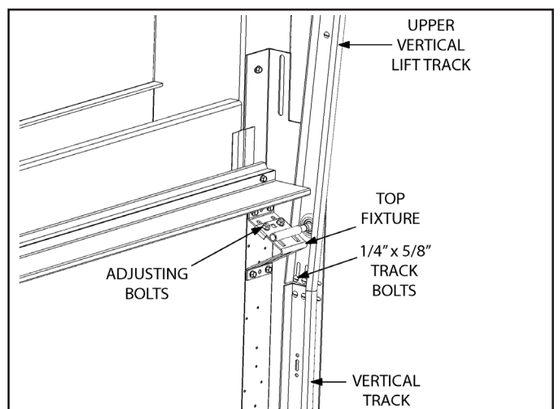

Figure 22

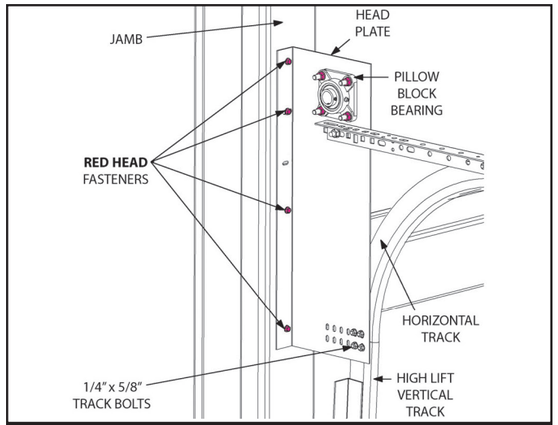

Figure 23

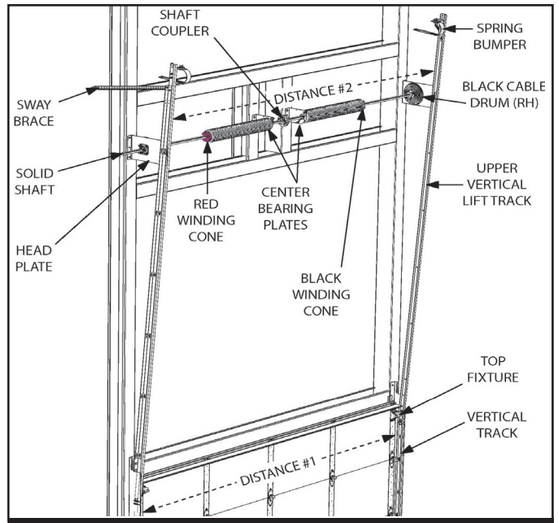

Figure 24

FULL VERTICAL

(Fig. 24 shows a typical installation.)
Attach the left hand **UPPER VERTICAL LIFT TRACK** to the top of the verticals with two 1/4" x 5/8" track bolts and 1/4" keps nuts (Fig. 22). Use a level to plumb it in place so the Upper Vertical Lift Track is exactly vertical. Secure the head plate to the jamb with appropriate **RED HEAD** fasteners (Fig. 25).

Install the right hand upper vertical lift track in the same manner. Instead of using a level to plumb the right hand track, measure the distance between the vertical tracks at the top of the door. Then locate the right hand head plate to achieve the same distance between the upper tracks. This is shown as Distance 1 and Distance 2 on Fig. 24. Anchor the right hand head plate with the appropriate **RED HEAD** fasteners.

Ensure there is a good fit between the lower and upper verticals so that the rollers can pass smoothly through the joints.

TOP FIXTURE: Slide adjustable bracket on top fixtures (Fig. 22) away from door, until the top section is tight against the door-stop, and tighten the adjusting bolts.

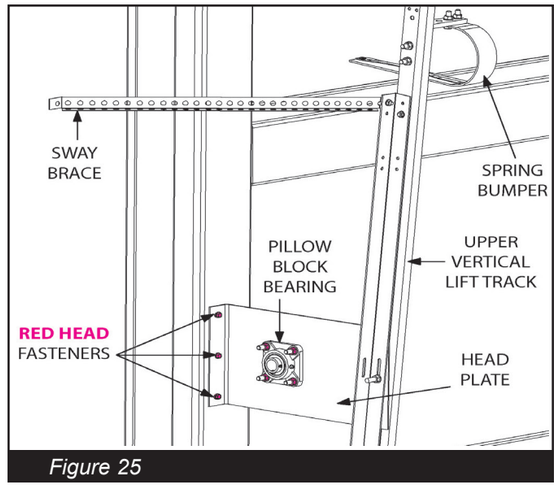

Figure 25

The **SPRING BUMPERS** and **SWAY BRACES** will be installed later. Now go to step 17.

ROOF PITCH

(Fig. 26 shows typical installation.)
HORIZONTAL TRACK: The horizontal track will follow the incline of the roof. Suspend the rear of the horizontal track assembly from the ceiling with rope (Fig. 19).

MIDLAND GARAGE DOOR MFG CO
COMMERCIAL GARAGE DOOR **OWNERS MANUAL**

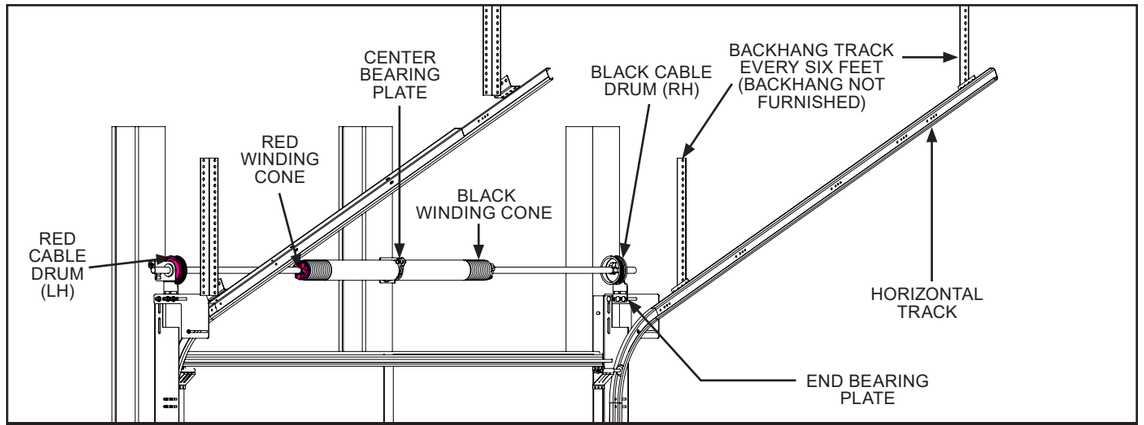

Figure 26

Position the front of the horizontal track on top of the vertical track and attach using the 1/4" x 5/8" track bolts and flange nuts and the 3/8" x 3/4" carriage bolt and **RED** flange nut. Only finger tighten the bolts at this time. Ensure the rear of the tracks are at or slightly above their final position. Ensure the horizontal tracks line up properly over the vertical tracks (so the rollers will roll through the joint smoothly). Tighten the bolts to secure the horizontal track in place.

NOTE: The factory has cut all angles based on the pitch specified. Actual field conditions may vary and require small modifications to the joint between the vertical and horizontal tracks.

TOP FIXTURE: Slide adjustable bracket on top fixtures (Fig. 27) away from door until the top section is tight against the door-stop and tighten the adjusting bolts.

END BEARING PLATE: Attach the End Bearing Plates (Fig. 27). The alignment plate is used with the end bearing plate to ensure that the door clears the drum during operation. Line up the hole on the track radius with the thinner slot of the alignment plate and attach to track. Next attach the alignment plate to the flag bracket using a 3/8" carriage bolt and flange nut.

Use the 3/8" x 3/4" carriage bolts and **RED** flange nuts and **RED HEAD** Parkers or **RED HEAD** wood lags as required to anchor the bearing plates in position.

See included roofline pitch instruction supplement for detailed steps in installing the end bearing plate with the alignment plate.

Now go to step 17.

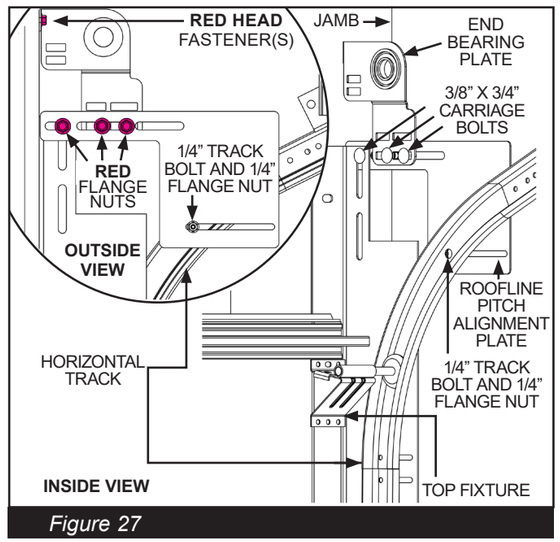

Figure 27

LOW HEADROOM FRONT/REAR:
Installation is the same as “Standard Radius” except the End Bearing Plates are factory installed on the horizontal track. Install the top section if not done previously. Install the LHR top fixtures. Put 1/4” x 7/8” self tappers in the slots only, so they can be adjusted to final position later (Fig. 28).

STEP 17:
INSTALL CENTER BEARING PLATE(S)

Refer to the Spring Assemblies Illustration (Fig. 29) and determine which spring/shaft configuration your door uses. Arrange the Center Bearing Plate(s) along the shaft line so there is enough room for each spring.

REMEMBER- A SPRING MAY STRETCH A COUPLE INCHES AS IT IS WOUND!

NOTE: For CENTER PULL and COUPLED DUAL SHAFT LINE doors refer to the instruction insert located in the hardware box.

The Center Bearing Plate(s) must be in line with End Bearing Plates so the shaft line is straight. This may be accomplished by measuring from the top of the door to the center of the shaft line at the End Bearing Plates. Use that measurement to locate the Center Bearing Plate above the door. Figure 30 shows a typical installation.

FOR WOOD HEADER: Attach Center Bearing Plate(s) to the header using three 5/16” x 1 3/4” **RED HEAD** wood lags. Pre-drill holes with 1/4” bit to prevent wood from splitting.

FOR STEEL HEADER: Fasten with three 5/16” x 5/8” **RED HEAD** parkers per Center Bearing Plate. Pre drill a 1/4” pilot hole as required.

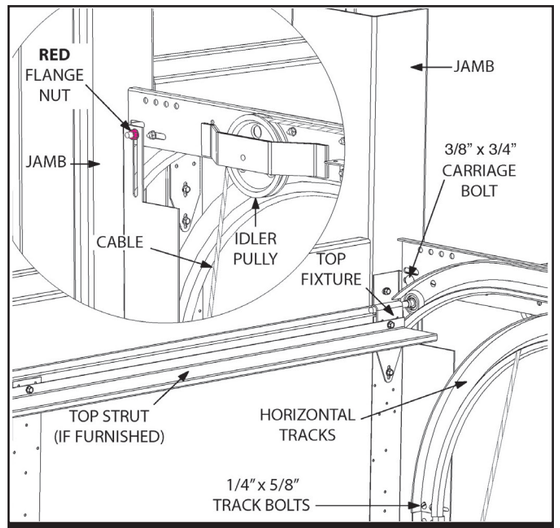

Figure 28

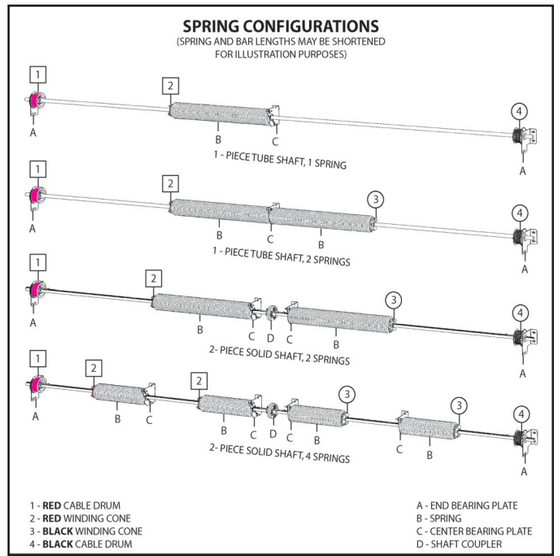

Figure 29

-CAUTION -

The Center Bearing Plate(s) anchors the springs and must be fastened securely to the wall. NEVER MOUNT ON A SOFT SURFACE SUCH AS SHEET ROCK. NEVER ATTEMPT TO REMOVE THE CENTER BEARING PLATE IF THE SPRINGS ARE WOUND.

MIDLAND GARAGE DOOR MFG CO
COMMERCIAL GARAGE DOOR **OWNERS MANUAL**

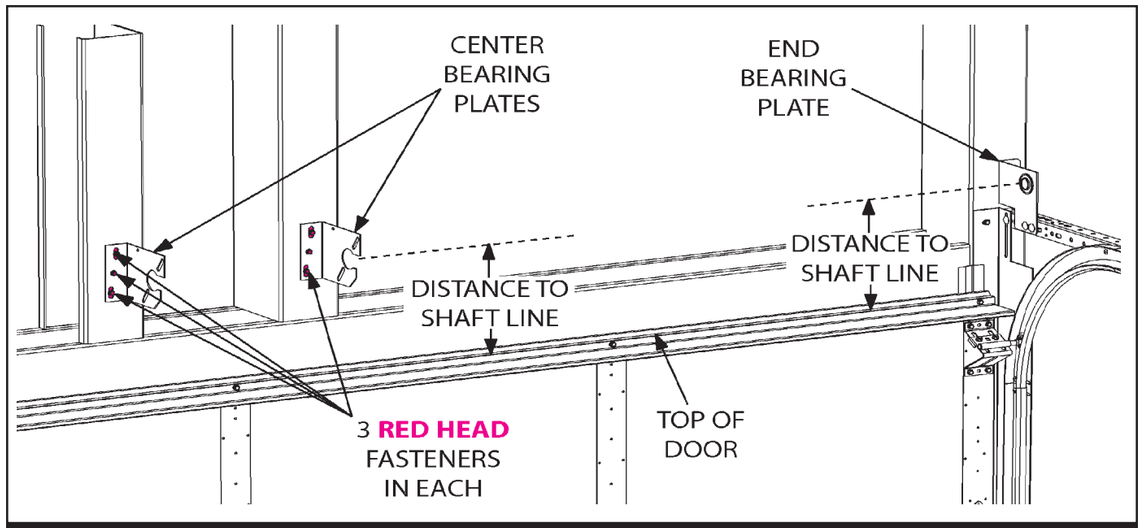

Figure 30

STEP 18:
SPRING SHAFT ASSEMBLY

NOTE: FOR LOW HEADROOM APPLICATIONS REFER TO PAGE 26. FOR ALL OTHER APPLICATIONS, USE THE FOLLOWING INSTRUCTIONS.

Refer to the Spring Assemblies Illustration (Fig. 29) and determine which spring/shaft configuration your door uses. Assemble the components accordingly. Place the spring shaft on saw horses. Insert a **BEARING** into one spring anchor cone (Fig. 31a) and slide the spring(s) on the shaft(s) (It is easier to work with heavier spring assemblies on the floor.).

NOTE: FOR TUBE SHAFT, ONLY ONE CENTER BEARING IS REQUIRED WHETHER THE DOOR IS SUPPLIED WITH ONE SPRING OR TWO. FOR SOLID SHAFT, EACH SPRING WILL GET A BEARING.

CAUTION: The springs are **LEFT** and **RIGHT** hand wound. **WHEN INSIDE THE BUILDING LOOKING OUT** the spring with the **RED** winding cone is on the **LEFT** side of the door and the spring with the **BLACK** winding cone is to the **RIGHT** side of the door. Slide the cable drums on the shaft. The **RED** drum goes and the **LEFT** side and the **BLACK** drum on the **RIGHT** side. Ensure the set screws are facing “IN” toward the center of the door.

SHAFT COUPLER: If your door utilizes a split solid shaft, install the **SHAFT COUPLER** by removing the 3/8” x 2” joining bolts and installing a coupler half on each of the shafts. Insert the square keyways and tighten the setscrews and lock nuts (Figs. 31a & 32). Save the joining bolts for after the springs are wound.

NOTE: If a JACKSHAFT OPERATOR is going to be used, one shaft will be longer than the other. USE THE LONGER SHAFT ON THE SIDE THE JACKSHAFT OPERATOR WILL BE INSTALLED.

NOTE: If your door utilizes “PILLOW BLOCK BEARINGS” on your End Bearing Plates, you must use a SPACER between the drum and the End Bearing Plate (Fig. 33).

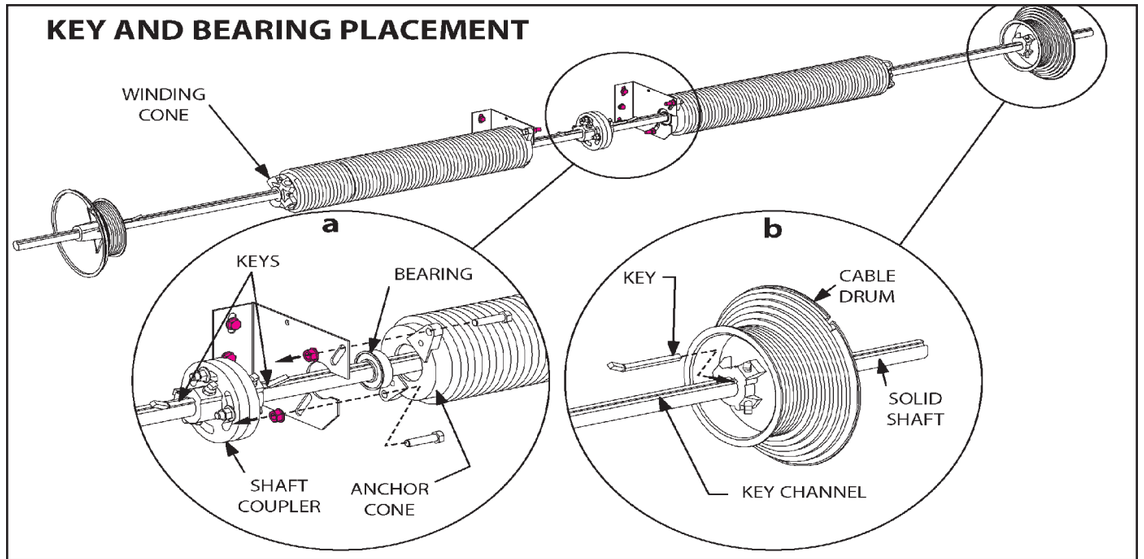

Figure 31 (a&b)

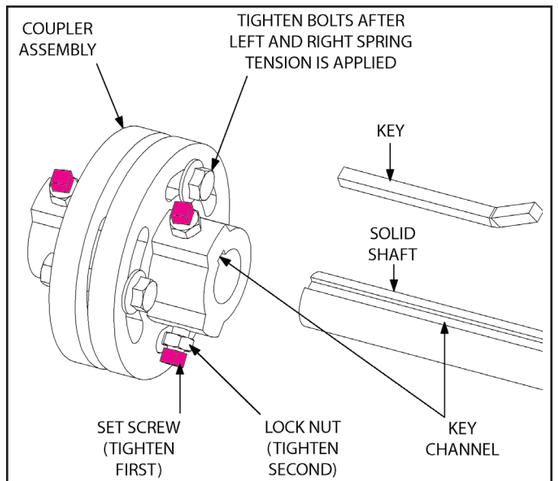

Figure 32

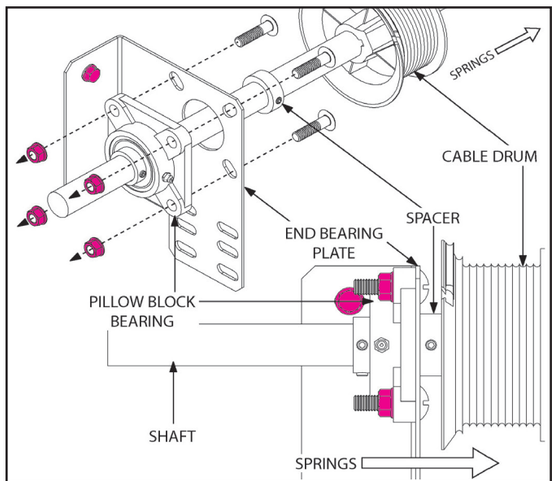

Figure 33

STEP 19:
INSTALL SPRING ASSEMBLY

Use the appropriate instruction below:

TUBE SHAFT: Lift the spring assembly up into position. Slide the left end of Shaft through the left End Bearing Plate and slide back through right End Bearing Plate (It may be helpful to slightly tighten the spring set screws on the Shaft to prevent the springs from moving during this process.).

SPRINGS WITH **RED** CONES MUST BE FACING THE LEFT SIDE OF THE DOOR AND SPRINGS WITH **BLACK** CONES MUST BE FACING THE RIGHT SIDE OF THE DOOR.

MIDLAND GARAGE DOOR MFG CO
COMMERCIAL GARAGE DOOR **OWNERS MANUAL**

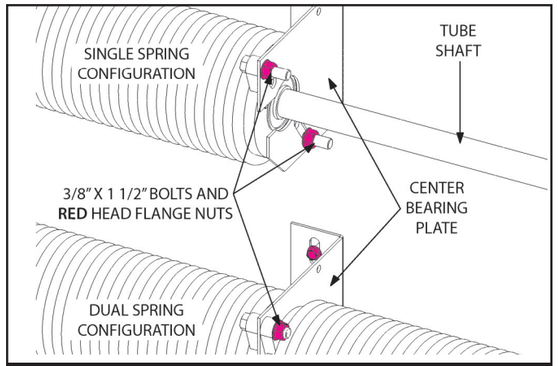

Figure 34

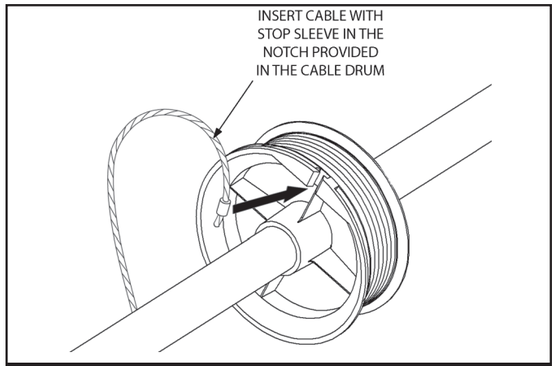

Figure 35

Fasten to Center Bearing Plate with 3/8" x 1 1/2" bolts and the **RED** 3/8" flange nuts and tighten (Fig. 34). Be sure the shaft line is straight both up and down and in and out from the wall.

SOLID SHAFT: Lift the left spring assembly up into position and slide the shaft through the End Bearing Plate. Fasten the anchor cones to Center Bearing Plate with 3/8" x 1 1/2" bolts and the **RED** 3/8" flange nuts and tighten (Fig. 31). Be sure the shaft line is straight both up and down and in and out from the wall. Repeat process for the right spring assembly. Butt the left and right shaft coupler halves against each other, but do not install the 3/8" x 2" joining bolts yet.

NOTE: THE SPRING ANCHOR CONES MUST FIT SNUGLY AND EVENLY AGAINST THE CENTER BEARING PLATE.

STEP 20:
SET THE CABLE DRUMS

Center the shaft line so there is an equal amount extending through the left and right End Bearing Plates.

NOTE: If your application will have a Jackshaft Operator, you will have solid shafts. One of the shafts will be 12" longer for the operator to hook up to.

Use the appropriate instruction below:

NOTE: On FULL VERTICAL and HIGH LIFT you will have "extra" cable length. Do not cut the cables. Wrap the extra cable on the drum.

TUBE SHAFT: Position the left (**RED**) cable drum tightly against the left End Bearing Plate and tighten the set screws. Bring cable up between wall and roller stem, behind the cable drum and position the cable bead into the notch on the outside edge of cable drum (Fig. 35). **ROTATE THE CABLE DRUM AND THE SHAFT UNTIL CABLE IS TIGHT.** Check to be certain there is no "loose" cable on the drum and that the cable runs free and clear all the way to the bottom fixture. Clamp a vise grip on top of the shaft and against the header to maintain cable tension (Fig. 36). Take note of the cable tension you have. You will want to duplicate that tension on the right side.

NOTE: DO NOT SEVERELY OVERTIGHTEN SET SCREWS ON DRUMS OR SPRINGS. This would distort and weaken the shaft.

Position the right (**BLACK**) cable drum tightly against the right End Bearing Plate and bring cable up as before and fasten to cable drum. Rotate the cable drum until this cable has the same tension as the left cable. Tighten the set screws in sequence (Fig. 37).

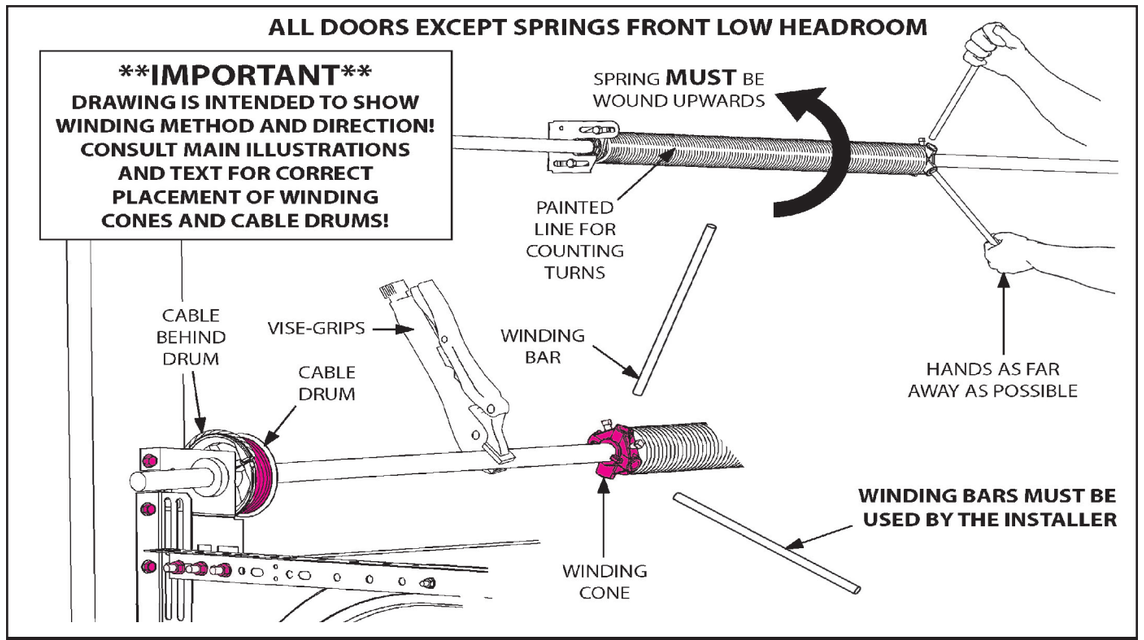

Figure 36

NOTE: CABLE TENSION ON EACH SIDE MUST BE EQUAL SO THE DOOR WILL BE LEVEL AND OPERATE PROPERLY.

SOLID SHAFT: Make sure the left and right shaft couplers are butted up against each other. Starting on the left side, slide the cable drum against the End Bearing Plate. Insert the Square Key in the keyway and tighten the setscrews (Fig. 31b).

Bring cable up between wall and roller stem, behind the cable drum, and position the cable bead into the notch on the outside edge of cable drum (Fig. 35). **ROTATE THE CABLE DRUM AND THE SHAFT UNTIL CABLE IS TIGHT.** Check to be certain the cable bead is seated against the cable drum and that there is no “loose” cable on the drum. The cable must run free and clear all the way down to the bottom fixture. Clamp a vise grip on top of the shaft and against the header to maintain cable tension (Fig. 36). Repeat this process on the right side.

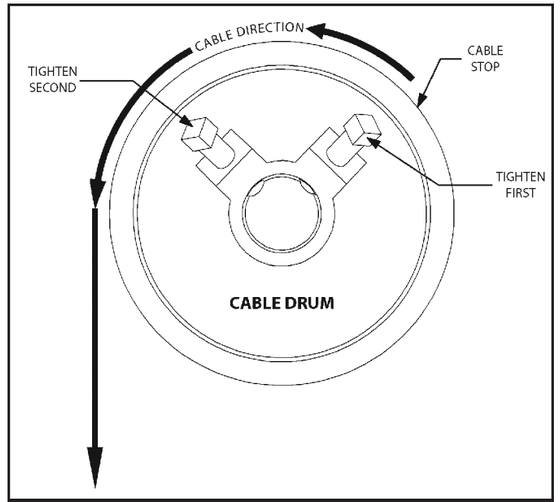

Figure 37

MIDLAND GARAGE DOOR MFG CO
COMMERCIAL GARAGE DOOR **OWNERS MANUAL**

STEP 21:
WINDING SPRINGS

Clamp the door down.

- CAUTION -

CLAMP DOOR SECURELY CLOSED ON BOTH SIDES USING C-CLAMP VISE GRIPS BEFORE WINDING ANY TENSION ONTO SPRINGS. SPRING TENSION IS DANGEROUS. ONLY USE PROPER SIZED WINDING BARS. NEVER USE SCREWDRIVERS OR OTHER TOOLS TO WIND SPRINGS.

COMMERCIAL DOOR SPRINGS CAN BE LARGE AND POWERFUL. MAKE SURE LADDERS, SCAFFOLDING OR LIFTS ARE SECURE AND STABLE AND PROVIDE A GOOD POSITION FROM WHICH TO WIND THE SPRINGS.

Make a line across the spring(s) to assist in counting turns as you wind the spring. A grease pencil, chalk, or spray paint works well (Fig. 36).

Using two cold rolled steel winding bars that fit snugly in the holes of the winding cone, wind springs the number of turns (COMPLETE REVOLUTIONS) specified on the spring tag. The bars should be at least 18” long. The bigger the springs, the longer the bar should be.

AS A DOUBLE CHECK: ALWAYS WIND IN THE DIRECTION INDICATED BY THE CUT OFF END OF THE SPRING WIRE (Fig. 38).

Wind springs carefully, keeping hands as far away from springs as possible for best leverage (Fig. 36). The spring will stretch as you wind it. Upon completing the number of turns specified, be sure the spring has stretched enough and is not “bound up”. Tighten set screws on spring winding cone while maintaining spring tension (If you have a SOLID SHAFT, one of the set screws is typically run in the 1/4” keyway of the shaft.). After winding all springs, go to Step 22.

LEAVE THE WARNING TAG ATTACHED TO THE SPRING!

IF YOU MUST REDUCE SPRING TENSION OR UNWIND COMPLETELY: Follow all precautions for winding springs. If there is only one spring on the door, clamp a vise grip on the spring shaft to hold the cable drums in place (Step 20). Insert winding bar in the spring cone and hold tension against the spring. Carefully loosen the set screws and hold the full spring tension. Unwind the spring the desired amount. Reset set screws as required.

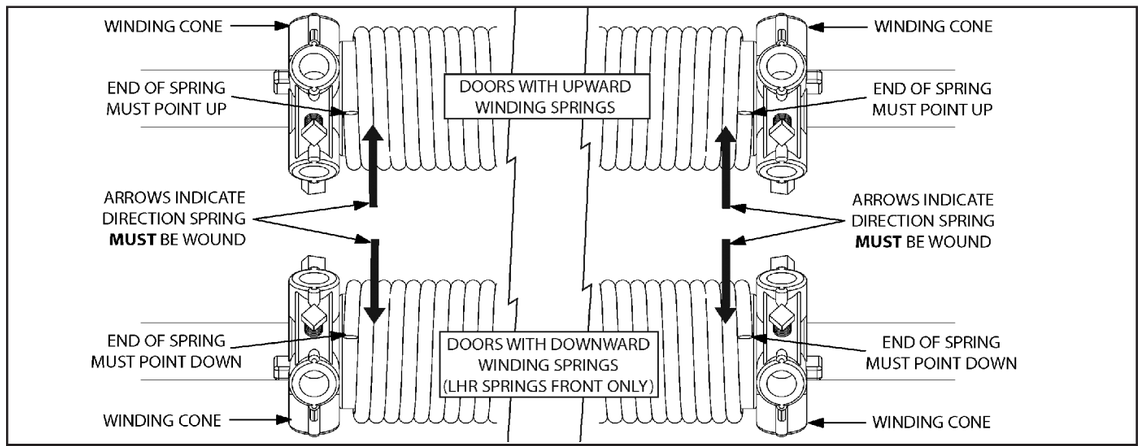

Figure 38

STEP 22:
SHAFT COUPLER:
(SOLID SHAFT ONLY) Install and tighten the three 3/8” x 2” joining bolts (Fig. 32).

STEP 23:
BACK HANG: ALL DOORS EXCEPT FULL VERTICAL
Use the following to determine your doors back hang requirements:

STANDARD RADIUS OR LOW HEAD ROOM:
- Doors up to 8’ high - One back hang per side.
- Doors over 8’ high and up to 14’ high - Two back hangs per side.
- Doors over 20’ wide OR over 14’ high - Three back hangs per side.

HI LIFT:
- Back of horizontals up to 8’ from header - One back hang per side.
- Back of horizontals 8’ to 16’ from header - Two back hangs per side.
- All Doors over 20’ wide - One back hang per side for every 6’ horizontal track.

Remove the vise grip(s) from the shaft line. While keeping a good hold on the door (in case the springs are overwound), remove the clamps holding the door down. Raise the door approximately half way up or to the first back hang position and clamp in place. Ensure that the tracks are level or slightly up and run parallel with the door with approximately 1/2” clearance between the track and the door. Back hang the door (See your door types main illustration for back hang examples.).

NOTE: PUNCHED ANGLE IS AN OPTION FOR BACK HANG WHICH MUST BE ORDERED IN ADDITION TO THE DOOR PACKAGE.

STEP 24:
FINAL ITEMS AND ADJUSTMENTS
Choose the final instructions for your application.

STANDARD RADIUS, ROOF PITCH, & LOW HEAD ROOM: Install 3/8” x 1 1/2” bolts at the rear end of the horizontal tracks. These prevent the top section rollers from rolling out the back of the track.

FULL VERTICAL: Install a **SWAY BRACE** on each upper vertical track to prevent them from spreading. Raise the door to its desired full open position, clamp in place, and install the **SPRING BUMPERS** (Fig. 25).

HIGH LIFT: Raise the door to its desired full open position, clamp in place, and install the **SPRING BUMPERS** (Fig. 21).

LOW HEAD ROOM:
TOP FIXTURES: With the door fully closed, final adjust the top fixtures so the top section fully closes. Add an additional self tapper in each so the top fixtures can’t move. If a strut is required at the top of the section (for doors with a drawbar operator), install the strut over the top of the top fixtures (Fig. 28).

ALL DOORS:
Attach the **LIFT HANDLE** and the **INSIDE SLIDE LOCK** to the second section with self tappers (Fig. 6). The door should work smoothly and easily throughout its range of operation. Adjust spring tension in 1/4” turn increments as required. Ideally, the door should be able to rest on the floor, stop half way up, and pull down reasonably well, out of the opening.

With door closed, push the lower portion of vertical track towards jamb until door fits lightly against door stop and tighten the 1/4” kep nuts on jamb brackets/ angle mount.

Ensure that the rollers run smoothly through the joint of the vertical and horizontal tracks. Use your hammer or vise grips to make small adjustments if they are not lined up well.

Check that the door is square in the opening and the tracks are properly aligned.

MIDLAND GARAGE DOOR MFG CO
COMMERCIAL GARAGE DOOR **OWNERS MANUAL**

WEATHER STRIP:
VINYL WEATHERSTRIP-WOOD JAMB: With the door closed, check that the door stop is positioned satisfactorily against the door and nail securely.

PERIMETER SEAL/BRUSH: Install with owner supplied fasteners (Fig. 39).

TOP SEAL: Install on the top of the top section with owner supplied fasteners (Fig. 40).

Check that all bolts and screws are tight. If necessary, lubricate all hinges, bearings, and rollers with lightweight oil. Make sure all the nails holding sections to jambs have been removed.

Check that all the protective film has been removed.

Clean the door as required.

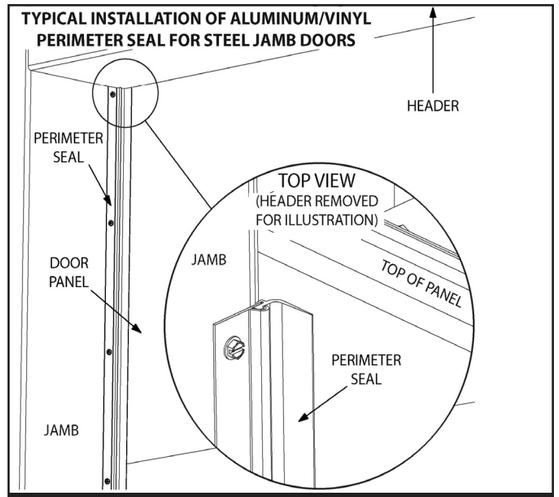

Figure 39

STEP 25:
INSTRUCTIONS AND WARNING LABELS
In the hardware box you have received an envelope of labels. Place all labels at eye level after installation of door. Post the Owners Manual on the jamb near the door. It has valuable maintenance and warranty information for the owner.

STEP 26:
OPERATOR INSTALLATION
If installing an operator, install in accordance with the manufacturers recommended instructions. Remove the pull rope and make sure the door remains unlocked (Remove or disable slide lock).

NOTE: Midland does not recommend using a jackshaft operator on a standard radius door. If the installation leaves no other option, the back of the horizontal tracks must be raised approximately 4” and-pusher-springs-installed.

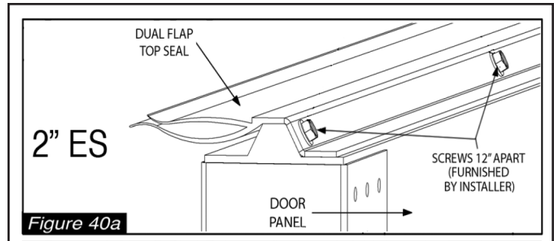

Figure 40a

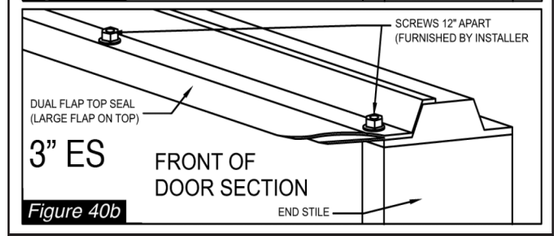

Figure 40b

Figure 40

INSTALLATION INSTRUCTIONS LOW HEADROOM FRONT AND REAR

Figure 43 shows a Low Headroom Springs Front. Figure 44 shows a Low Headroom Springs Rear.

The sequence of installing Low Headroom-Springs Front/Rear is the same as outlined in the standard Installation Instructions with the exception of the following:

BOTTOM FIXTURE
The Low Headroom Bottom Fixture (Fig. 41), is attached to the bottom section. Drill 1/4" pilot holes and fasten to section with 5/16" x 5/8" **RED HEAD** Parkers. Fasteners are as shown in the standard instructions.

NOTE: BOTTOM FIXTURES MUST BE LOCATED THE SAME DISTANCE FROM THE TOP OF THE SECTION ON BOTH SIDES.

END HINGES
Refer to (Fig. 42) to determine the proper number hinge to start with for your door and track combination. Position the hinge over the pre punched holes on the end stile at the top of the section. Orient hinges as shown in (Fig. 5). Fasten with 1/4" x 3/4" Self Tappers.

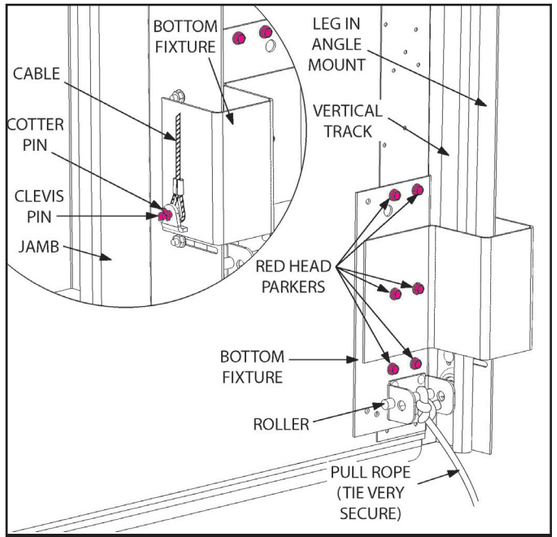

Figure 41

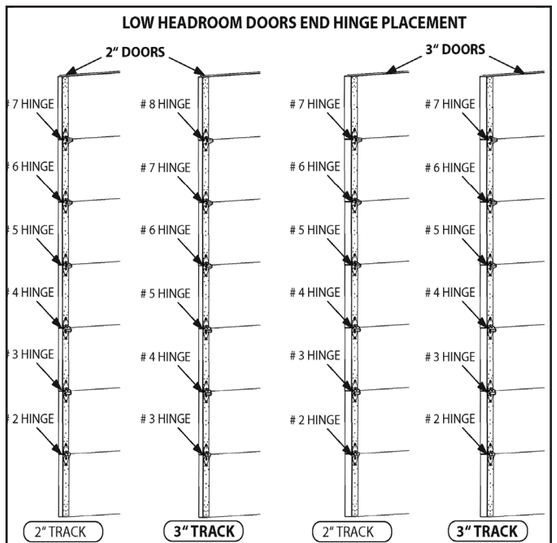

Figure 42

MIDLAND GARAGE DOOR MFG CO
COMMERCIAL GARAGE DOOR **OWNERS MANUAL**

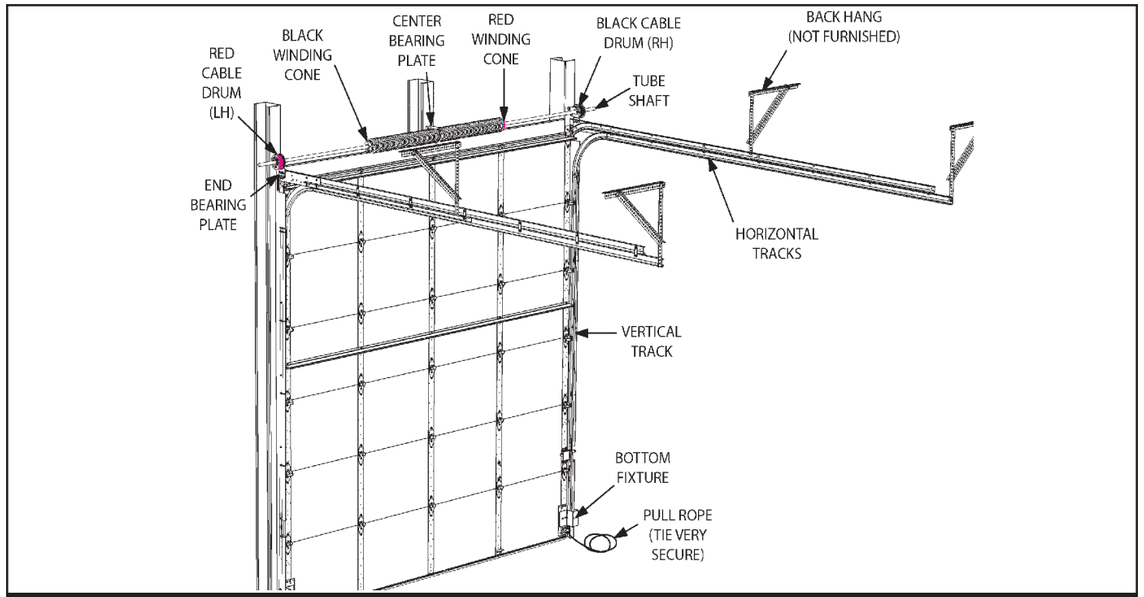

Figure 43

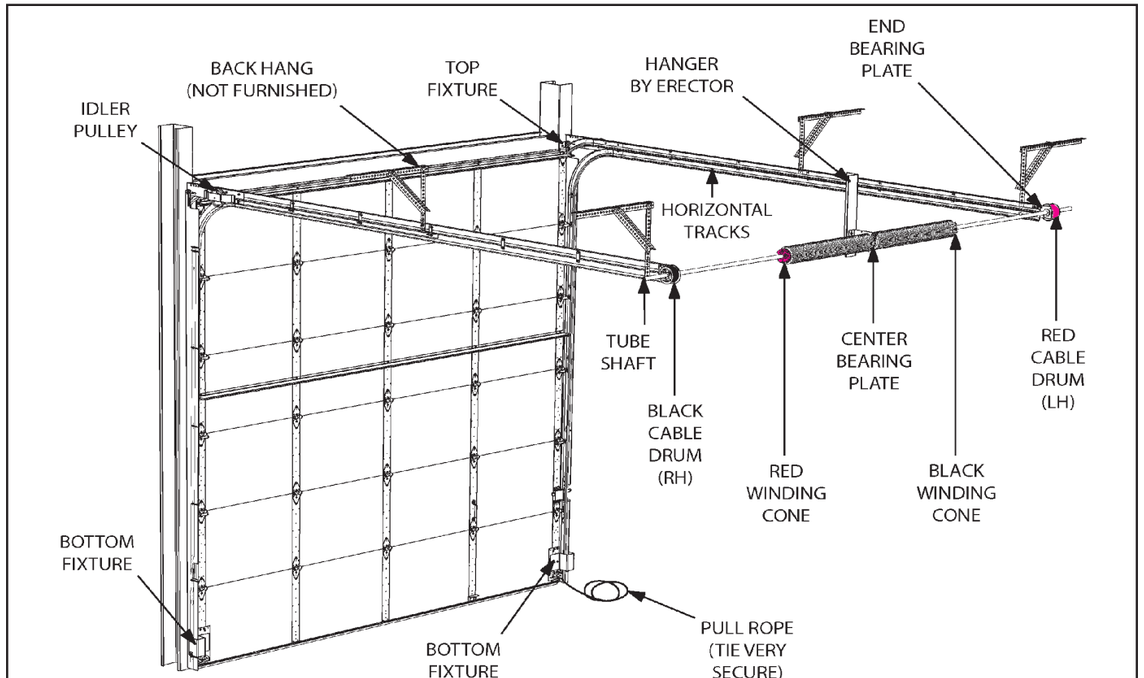

Figure 44

TOP FIXTURE
You must wait to install the Low Headroom top fixtures until the horizontal tracks are in place. **IF A STRUT IS REQUIRED FOR THE OPERATOR there are two options:**

1. Install the strut now, 1" down from the top of the door, and only fasten it on the center stiles so you can slip the LHR top fixtures underneath the ends later.
2. Leave the top strut off until the door is complete and the LHR top fixtures are adjusted to their final position. Fig. 45 shows a final assembly.

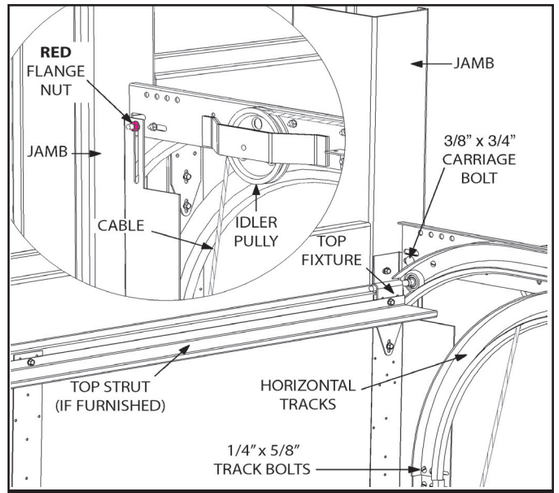

Figure 45

SPRING SHAFT ASSEMBLY

- **LOW HEADROOM SPRINGS FRONT:** (Fig. 43)

END BEARING PLATES: Ensure the End Bearing Plates are mounted to the horizontal track and the jambs as depicted in (Fig. 46).

SPRINGS: The spring(s) will be mounted **OPPOSITE** of the standard radius track configuration. The spring with the **BLACK CONE** is to the **LEFT** side of door. The spring with the **RED CONE** to the **RIGHT** side of door.

CABLE DRUMS: The **RIGHT HAND** cable drum (**BLACK**) will remain on the **RIGHT SIDE** of door, the **LEFT HAND** cable drum (**RED**) will remain on the **LEFT SIDE** of door. **THE DRUMS WILL BE MOUNTED ON THE OUTSIDE OF THE TRACK, AND THE SET SCREWS WILL FACE AWAY FROM THE CENTER OF THE DOOR.**

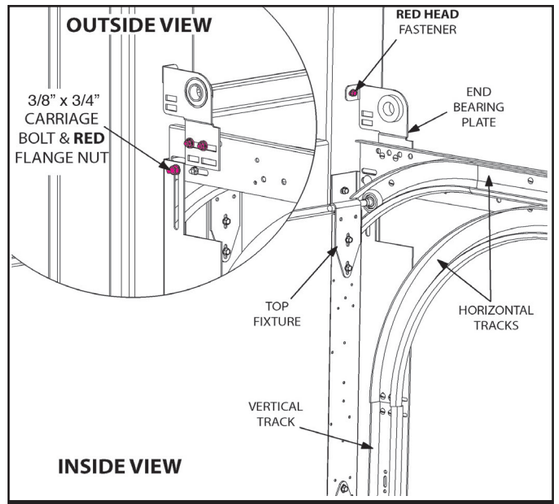

Figure 46

MIDLAND GARAGE DOOR MFG CO
COMMERCIAL GARAGE DOOR **OWNERS MANUAL**

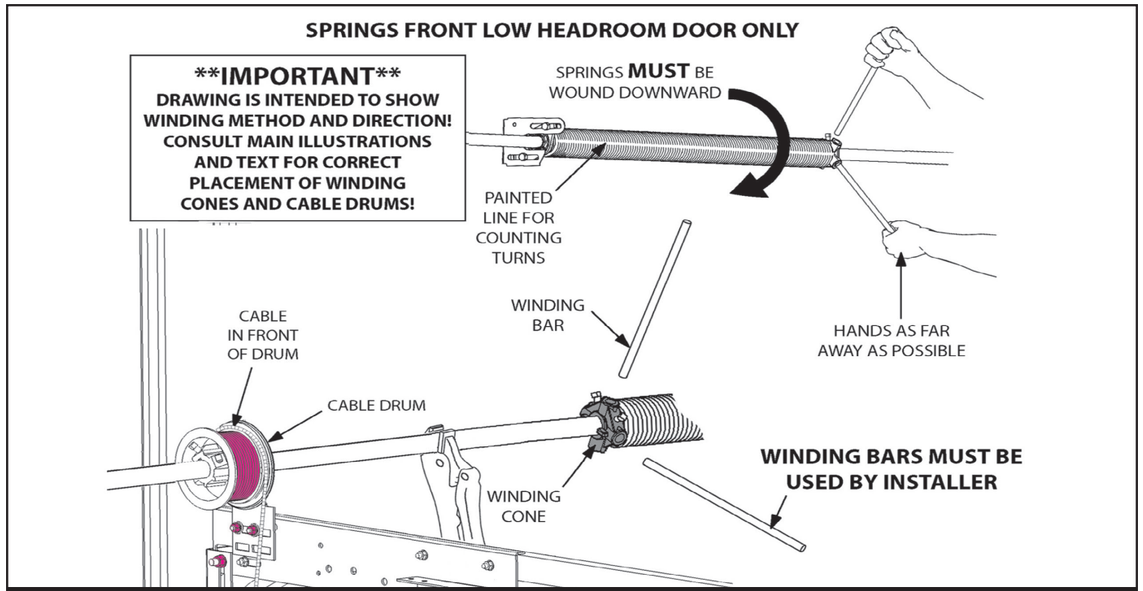

Figure 47

WHEN WINDING LOW HEADROOM TORSION SPRINGS FRONT, YOU PULL DOWN ON THE WINDING BARS! (Fig. 47)

AS A DOUBLE CHECK: ALWAYS WIND IN THE DIRECTION INDICATED BY THE CUT-OFF END OF THE SPRING WIRE (Fig. 38).

- **LOW HEADROOM SPRINGS REAR:** (Fig. 44)

CENTER BEARING PLATE: Mount the center bearing plate on the hangar supplied by the erector (Fig. 48).

SPRINGS: The spring(s) will be mounted the SAME as standard radius track configuration. The spring with the BLACK CONE is to the RIGHT side of door. The spring with the RED CONE to the LEFT side of door.

CABLE DRUMS: The **RIGHT HAND** cable drum (**BLACK**) will be on the **LEFT SIDE** of door, the **LEFT HAND** cable drum (**RED**) will go on the **RIGHT SIDE** of door. **THE DRUMS WILL BE MOUNTED ON THE OUTSIDE OF THE**

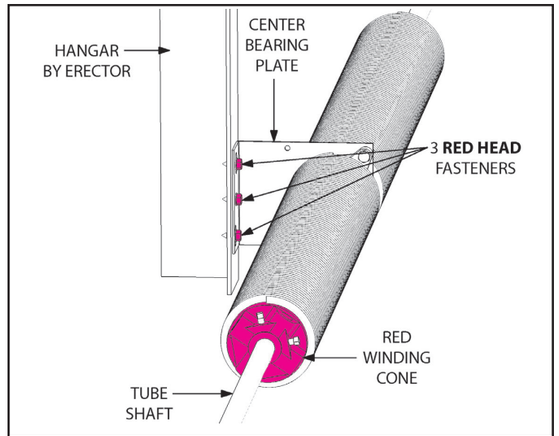

Figure 48

TRACK, AND THE SET SCREWS WILL FACE AWAY FROM THE CENTER OF THE DOOR (Fig. 44).

WHEN WINDING LOW HEADROOM TORSION SPRINGS REAR, YOU PUSH UP ON THE WINDING BARS! THEY ARE WOUND THE SAME AS A STANDARD SPRING INSTALLATION (Fig. 36).

MAINTENANCE

CLEANING

From time to time your garage door will require cleaning.

For general accumulations of dust and dirt, wash with a mild detergent and rinse with clear water.

For accumulations causing rusting we recommend the following:

- "Orange Clean" paste cleaner for rust stains
- "Bar Keepers Friend"
- "Turtle Wax" Rubbing Compound (white)
- "Turtle Wax" Chrome Polish and Rust Remover
- "Rusty Exterior" rust stain remover
- "Iron Out" stain remover

If adhesive transfer has occurred from the protective film to the face of the door:

- Very hot soapy water
- Very hot soapy water with denatured alcohol
- Straight denatured alcohol
- "Goo Gone"
- "3M Adhesive Remover"

To restore the luster of the paint:

- "Turtle Wax" Car Wash and Cleaner
- "Turtle Wax" Rubbing Compound
- "Orange Clean" cleaner

CAUTION: SOME OF THESE PRODUCTS ARE AGGRESSIVE. USE CARE NOT TO RUB THROUGH THE PAINT.

INSPECTION

Inspect your garage door once a year. More often if it has high cycles or operates in a harsh environment.
CHECK FOR THE FOLLOWING:

- **Door:** General condition, seals the floor, square in the opening, smooth operation, rope (if installed) not frayed, spring tension-door balances okay
- **Weather strip:** General condition, seals the door
- **Fasteners:** General tightness and security of all fasteners and parts
- **Hinges:** Broken, general wear, loose
- **Rollers:** General wear
- **Cables:** Fraying, attachment to bottom fixture, wrapping properly on the drums
- **Springs:** General condition, mounting hardware all secure, condition of shaft, bearings, drums, and center bearing plate
- **Track:** Bent, loose, alignment
- **Back hang:** Secure
- **Operator:** Check the reversing functions of the operator according to the manufacturers instructions

MIDLAND GARAGE DOOR MFG CO
COMMERCIAL GARAGE DOOR **OWNERS MANUAL**

LUBRICATION

Use a light weight oil like WD 40 or Three in One Light Oil to lubricate the following:

- **Hinges**
- **Steel rollers:** Roller shaft in the hinge and ball bearings in the roller.
- **Nylon Rollers:** Roller shaft in the hinge and roller shaft where the nylon tire turns. Do NOT lube the outside of the nylon tire as that may cause it to slip and create flat spots.
- **Bearings**
- **Springs:** Be sure and wipe off any excess oil so it will not drip on the face of your door.
- **Lock T Handle and moving parts**

DO NOT GREASE THE TRACKS

SERVICE

If service is needed:

If you are not well experienced at working with garage doors please contact your nearest Midland dealer.

Components related to the torsion springs:

- Springs
- Cables
- Drums
- Spring shaft
- End bearing plate
- Bottom fixtures
- Center bearing plate
- Wood spring anchor pad should only be repaired or replaced by a professional door technician.

PAINTING

Should you decide to repaint your garage door we would recommend:

- Clean the surface thoroughly with Tri-Sodium Phosphate, Soilax, Spic & Span, or a similar product.

  CAUTION: DO NOT USE HARSH SOLVENTS SUCH AS LACQUER THINNERS OR MINERAL SPIRITS. THESE MAY CAUSE PAINT PEELING AFTER THE NEW TOPCOAT IS APPLIED.

- Scrub surface with a brush and sponge. Rinse with clear water and allow to dry.
- If the door has ever been waxed it is imperative that all wax is removed.
- If damage has occurred and the galvanized substrate has been compromised it will be necessary to treat these localized areas with a rust inhibiting primer. See your paint store professional for a suitable product.
- Scuff the door surface with a Scotch-Brite pad. Clean the door again as required.
- Top coat with a quality acrylic latex exterior paint. Apply per manufacturers instructions.

Be aware that re-painting your door does affect your warranty. See the warranty for details.

INSTITUTE OF DOOR DEALER EDUCATION AND ACCREDITATION
Proud Supporter of IDEA Certification Services
dooreducation.com

MIDLAND™
GARAGE DOOR MFG CO

Limited Warranty

Midland warrants its products to be free from defects in materials and workmanship as follows:

RESIDENTIAL

ThermoGuard™, ThermoSteel™, Series 24

- Midland warrants these steel garage door sections against rust through, paint finish cracking or peeling to the original purchaser for as long as they own the building in which the doors were installed.
- All other components except springs are warranted for 5 years.

Overlay

- Midland warrants these steel garage door sections against rust through, paint finish cracking or peeling to the original purchaser for as long as they own the building in which the doors were installed.
- Midland warrants the Smart Trim Overlay Boards against pulling off from the sections to the original purchaser for 5 years.
- Midland warrants the Smart Trim Overlay Boards against rot, buckling and surface defects to the original purchaser for 10 years.
- All other components except springs are warranted for 5 years.

FullView

- Midland warrants these aluminum garage door sections against rust through, paint finish cracking or peeling to the original purchaser for 5 years.
- All other components except springs are warranted for 5 years.

TS-138, ValuCraft Plus, Series 26

- Midland warrants these steel garage door sections against rust through, paint finish cracking or peeling to the original purchaser for 25 years.
- All other components except springs are warranted for 2 years.

COMMERCIAL

2" & 3" ThermoGuard™, 2" & 3" EnergySaver™, CS20 and CS24

- Midland warrants these steel garage door sections against rust through, paint finish cracking or peeling to the original purchaser for 10 years.
- All other components except springs are warranted for 2 years.
- Midland warrants components in a high cycle application for 1 year.

GENERAL

- Midland warrants the 3" EnergySaver™ sections used in harsh environments to the original purchaser for 1 year. No other section models are warranted when used in a harsh environment application.
- Midland warrants the harsh environment component package for 1 year.
- Midland warrants springs in all applications for 1 year to the original purchaser.
- Midland warrants all its ThermoSteel™, EnergySaver™ and ThermoGuard™ sections against delamination for a period of 10 years to the original purchaser.

COLORSELECT™

- Midland's ColorSelect™ shall be warranted against cracking, blistering, flaking or peeling to the original purchaser for a period of 5 years under normal use.
- Midland warrants to the original purchaser against aggressive color fade which alters the color of the product more than 5 Delta E units (as measured on a cleaned surface and measured per ASTM D2244) for a period of 5 years.

This warranty excludes the following:

1. Deterioration due to rust resulting from damage to the garage door section caused by fire, other accident or casualty, vandalism, harmful fumes or chemicals, condensation or occurring as a result of any physical damage.
2. Failure of paint if any top coatings are applied to factory paint.
3. Onsite labor.
4. Freight charges.
5. Scratches or dents occurring after pick up or delivery from Midland.
6. Damage caused by improper installation, maintenance or product alteration.
7. Damage caused by misuse, abuse or accident.
8. Delamination as a result of a heat source too close to the garage door sections (eg heaters, lights, etc.)
9. Wear from normal operation.
10. The warranty of the manufacturer shall be limited to the repair or replacement only for such parts which may be acknowledged by the manufacturer to be defective.

To make a claim under this warranty contact your Midland dealer. A written claim accompanied by proof of purchase must be submitted within 30 days of discovery of the suspected defect. Midland may at its discretion send a representative to inspect the defective part and/or may request that the defective part be returned to the factory freight pre paid.

No warranty extends to consequential or incidental damages. All other express or implied warranties including any implied warranty of merchantability or implied warranty of fitness for purpose are hereby expressly excluded.

This warranty applies to doors purchased after July 1, 2017